TOWN OF SMITHFIELD

"The Ham Capital of the World"

October 5, 2016

TO: PLANNING COMMISSION

FROM: WILLIAM G. SAUNDERS, IV, AICP, CZA
PLANNING AND ZONING ADMINISTRATOR

RE: PLANNING COMMISSION MEETING

The Planning Commission will hold its regular meeting Tuesday, October 11th, 2016 at 6:30 PM in Conference Rooms A & B in the Smithfield Center.

Please call me at (757) 365-4266 or email me at wsaunders@smithfieldva.gov with any questions.

Enclosures

cc: Town Council
William H. Riddick, III, Town Attorney
The Smithfield Times
The Daily Press
File

DEPT. OF PLANNING, ENGINEERING, AND PUBLIC WORKS
310 Institute Street, P.O. Box 246 • Smithfield, VA 23431 • (757) 365-4200 • Fax (757) 357-9933
www.smithfieldva.gov • Local Cable Channel 6

SMITHFIELD PLANNING COMMISSION
MEETING AGENDA

October 11, 2016

1) **Planning and Zoning Administrator Activity Report**
   - Clontz Park Public Boat Ramp
   - Smithfield Foods Parking Lot Expansion

2) **Upcoming Meetings and Activities**
   October 18th - 6:30 p.m. -- Board of Historic & Architectural Review
   October 18th - 7:30 p.m. -- Board of Zoning Appeals – Cancelled
   October 24th - 4:00 p.m. -- Town Council Committee Meetings
   October 25th - 4:00 p.m. -- Town Council Committee Meetings
   November 1st - 7:30 p.m. -- Town Council Meeting
   November 8th - 6:30 p.m. -- Planning Commission Meeting

3) **Public Comments**
   The public is invited to speak to Planning Commission on any matters, except scheduled public hearing(s). Please use the sign-up sheet. Comments are limited to five (5) minutes per person. Any required response(s) from the Town will be provided in writing following the meeting.

4) **Planning Commission Comments**

5) **Entrance Corridor Overlay District Architectural Review - Joseph W. Luter, Jr. Sports Complex – 900 W. Main St. – Town of Smithfield, applicant.** (Staff report and architectural plans enclosed.)

6) **Approval of the September 13, 2016 meeting minutes** (Enclosed)

NOTICE OF INTENT TO COMPLY WITH THE AMERICANS WITH DISABILITIES ACT. Reasonable efforts will be made to provide assistance or special arrangements to qualified individuals with disabilities in order to participate in or attend Planning Commission Meetings. ADA compliant hearing devices are available for use upon request. Please call (757) 365-4200 at least 24 hours prior to the meeting date so that proper arrangements may be made.

STAFF REPORT TO
THE PLANNING COMMISSION

ENTRANCE CORRIDOR OVERLAY DISTRICT DESIGN REVIEW

October 11, 2016

Applicant Name & Address	Town of Smithfield 310 Institute Street Smithfield, VA 23430
Property Owner & Address	Town of Smithfield 310 Institute Street Smithfield, VA 23430
Property Location & Description	900 W. Main Street Approx. 1,800 ft. north of the intersection of Waterworks Road and W. Main Street. (TPIN #21-01-051)
Statistical Data (See Site Plan)	
Current Zoning	C-C, Community Conservation
Current Use	Agriculture
Proposed Use	Public Youth Sports Complex
Surrounding Land Uses/Zoning	C-C, Community Conservation; HR-C, Highway Retail Commercial; I-1, Light Industrial District; I-2, Heavy Industrial District
Conformity with Comprehensive Plan	Consistent with future land use designation of Parks and Recreation

Project Overview
The applicant, the Town of Smithfield, is seeking Entrance Corridor Overlay District design approval of the architectural plan for the public youth sports complex.

This complex, as shown in the accompanying plans will encompass five little league baseball fields, a multi-purpose field capable of supporting little league soccer and football, a paved track, concession stands and a playground; however, under review tonight are the architectural plans for the two concession stands and the brick fence at the entrance. The landscaping plan is forthcoming.

The concession stands exterior materials will be a mix of brick, spit-face block and cementitious siding. The roofing will be 30 yr. fiberglass shingles. The fence will be brick.

Staff Comments
In an effort to expedite the construction of the ballfields, the project has been divided into several components; the first of which, the basic site plan showing the complex amenities, was conditionally approved by the Planning Commission at their September 13, 2016 meeting. Now, the architectural plans for the concession stands and brick fence are before you in regard to the Entrance Corridor Overlay District design review.

Contact William Saunders at 365-4266 or wsaunders@smithfieldva.gov with any questions.

JOSEPH W. LUTER, JR. SPORTS COMPLEX

WEST MAIN ST., SMITHFIELD, VA 23430

HOPKE & ASSOCIATES INC. PROJECT No. 36021

SYMBOLS LEGEND

DETAIL/SECTION NUMBER OR ELEVATION GRID LOCATION

SHEET ON WHICH DRAWING IS SHOWN

REFERENCE BUBBLE

ELEVATION OR SECTION (FILLED) INDICATOR ARROW

DETAIL/SECTION NUMBER OR ELEVATION GRID LOCATION

SHEET ON WHICH DRAWING IS SHOWN

ELEVATION / SECTION BUBBLE

DETAIL NUMBER

DRAWING TITLE

A1.1, A1.2 SCALE: 1/8"=1'-0"

SHEET ON WHICH DETAIL IS REFERENCED

SHEET NUMBER ON WHICH DETAIL IS DRAWN

DETAIL KEY

CLOSET

- # ROOM NAME & NUMBER
- 44 OCCUPANCY: ROOM OR AREA
- 3 DOOR TAG
- B WINDOW TAG
- NORTH ARROW
- ELEVATION TARGET
- A WALL TYPE TAG

DRAWING KEYNOTE SYSTEM

A KEYNOTING SYSTEM IS USED ON THESE DRAWINGS FOR MATERIALS REFERENCES AND NOTES. REFER TO THE KEYNOTE LEGEND ON EACH SHEET FOR THE INFORMATION WHICH RELATES TO EACH KEYNOTE SYMBOL ON THE RESPECTIVE DRAWING. A MASTER LEGEND OF ALL KEYNOTES IS PROVIDED IN THE PROJECT MANUAL. THE KEYNOTES ARE STRUCTURED AS INDICATED BELOW:

4.CMU

- MOST APPLICABLE DIVISION E.G. 'DIVISION 4: MASONRY'
- 3 LETTER SUFFIX, E.G. 8" CMU WALL W. MTL. HORIZ. TRUSS-TYPE JT. REINF. @ 16" O.C. VERT

NOTE: THE ORGANIZATION OF THE KEYNOTING SYSTEM ON THE DRAWINGS, WITH THE KEYNOTE REFERENCE NUMBERS RELATED TO THE SPECIFICATIONS SECTIONS NUMBERING SYSTEM, SHALL NOT CONTROL THE CONTRACTOR IN DIVIDING THE WORK AMONG SUBCONTRACTORS OR IN ESTABLISHING THE EXTENT OF WORK TO BE PERFORMED BY ANY TRADE.

THIS DOCUMENT IN ITS ENTIRETY HAS BEEN ELECTRONICALLY SIGNED IN ACCORDANCE WITH TITLE 18 VAC 10-20-760.

ORIGINAL DOCUMENTS AS DESIGNED BY THE LICENSED PROFESSIONAL ("ARCHITECT") LISTED BELOW HAVE BEEN RETAINED BY HOPKE & ASSOCIATES, INC. THE ARCHITECT CANNOT ASSUME RESPONSIBILITY FOR MODIFICATIONS TO THIS DOCUMENT NOT MADE BY THE ARCHITECT OR EMPLOYEES OF HOPKE & ASSOCIATES, INC ON BEHALF OF THE ARCHITECT UNDER HIS / HER DIRECT CONTROL. ANY MODIFICATIONS NOT PERFORMED BY THE ARCHITECT OR EMPLOYEES UNDER HIS / HER DIRECT CONTROL INVALIDATE THE ELECTRONIC SIGNATURE.

ELECTRONICALLY SIGNED BY:

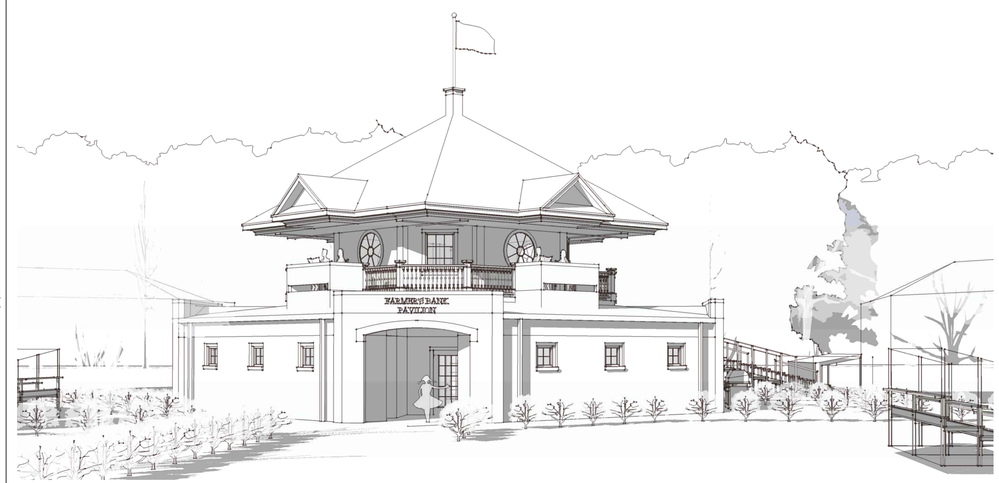

1 / T1.1 SCHEMATIC RENDERING

NOT TO SCALE

INDEX OF DRAWINGS

T-1	TITLE SHEET
	ARCHITECTURAL
A0.1	CODE DATA, HARDSCAPE PLAN
A0.2	ARCHITECTURAL SPECIFICATIONS
A0.3	ARCHITECTURAL SPECIFICATIONS
A1.1	FLOOR PLAN
A1.2	UPPER LEVEL PLAN, FINISH SCHEDULE
A1.3	SMALL RESTROOM BUILDING
A1.4	ENTRY GATEWAY
A2.1	BUILDING ELEVATIONS, DOOR SCHEDULE & DETAILS
A2.2	BUILDING ELEVATIONS, WINDOW SCHEDULE & DETAILS
A3.1	PARTIAL BUILDING SECTION, DETAILS
A3.2	PARTIAL BUILDING SECTION, DETAILS
A3.3	ENTRY PORTAL SECTIONS AND DETAILS
A3.4	ROOF PLAN, STAIR SECTIONS
A4.1	REFLECTED CEILING PLANS
A4.2	ENLARGED TOILET ROOM PLANS & ELEVATIONS
A4.3	INTERIOR ELEVATIONS CONT'D
	STRUCTURAL
S0.1	GENERAL STRUCTURAL NOTES
S0.2	GENERAL STRUCTURAL NOTES, DETAILS
S1.1	FOUNDATION PLAN
S1.2	LOW ROOF FRAMING PLAN
S1.3	HIGH ROOF FRAMING PLAN
S2.1	STRUCTURAL DETAILS
S2.2	STRUCTURAL DETAILS
S2.3	STRUCTURAL DETAILS
	PLUMBING
P-1	PLUMBING COVER SHEET/SPECIFICATIONS
P-2	BUILDING WATER SUPPLY PLANS
P-3	BUILDING SANITARY DRAINAGE PLANS
P-4	PLUMBING RISER DIAGRAMS
P-5	PLUMBING SCHEDULES
P-6	PLUMBING DETAILS
	MECHANICAL
M-1	MECHANICAL COVER SHEET/SPECIFICATIONS
M-2	BUILDING MECHANICAL PLANS
M-3	MECHANICAL SCHEDULES
M-4	MECHANICAL DETAILS
	ELECTRICAL
E-1	ELECTRICAL COVER SHEET
E-2	ELECTRICAL POWER PLAN
E-3	ELECTRICAL POWER PLAN
E-4	PHOTOMETRIC PLAN
E-5	PHOTOMETRIC PLAN
E-6	PHOTOMETRIC PLAN
E-7	BUILDING POWER PLAN
E-8	BUILDING LIGHTING PLAN
E-9	BUILDING UPPER LEVEL POWER AND LIGHTING PLAN
E-10	ELECTRICAL SCHEDULES
E-11	ELECTRICAL SCHEDULES
E-12	ELECTRICAL SCHEDULES

ABBREVIATIONS

@	AT
ACC'D	ACCORDING TO
ACT	ACOUSTICAL CEILING TILE
ADA	AMERICANS WITH DISABILITIES ACT
ADJ	ADJUST, ADJUSTABLE
AFF	ABOVE FINISHED FLOOR
AGGR	AGGREGRATE
ALT	ALTERNATE
ALUM	ALUMINUM
AMP	AMPERE
ANSI	AMERICAN NAT'L STANDARDS INST.
APPROX	APPROXIMATE
AWI	ARCHITECTURAL WOODWORK INST.
AHJ	AUTHORITY HAVING JURISDICTION
BITUM	BITUMINOUS
BLDG	BUILDING
BOT	BOTTOM
BTU	BRITISH THERMAL UNIT
BRG	BEARING
CL,	CENTERLINE
CFM	CUBIC FEET PER MINUTE
CEIL, CLG	CEILING
CLR	CLEAR
CMU	CONCRETE MASONRY UNIT
COL	COLUMN
CONC	CONCRETE
CONT	CONTINUOUS
CPT	CARPET
CT	CERAMIC TILE
DEMO	DEMOLITION, DEMOLISH
DIAM, Ø	DIAMETER
DIM	DIMENSION
DIV	DIVISION
DN	DOWN
DTL	DETAIL
DWGS	DRAWINGS
EA	EACH
ELEC	ELECTRICAL
ELEV	ELEVATION
EPDM	ETHYLENE-PROPYLENE-DIENE MONOMER
EQ	EQUAL
EQUIP	EQUIPMENT
EXIST	EXISTING
EXP	EXPANSION, EXPOSURE
EXT	EXTERIOR
FDTN	FOUNDATION
FIN	FINISH
FLR	FLOOR
F.O.S.	FACE OF STUD
FT	FEET, FOOT
FTG	FOOTING
F.V.	FIELD VERIFY
GA	GAUGE
GALV	GALVANIZED
GC	GENERAL CONTRACTOR
GYP BD	GYPSUM WALL BOARD
GWB	GYPSUM WALL BOARD
H&A	HOPKE & ASSOCIATES
HORIZ	HORIZONTAL
HP	HORSEPOWER
HT	HEIGHT
HM	HOLLOW METAL
HVAC	HEATING, VENTILATING, & AIR CONDITIONING
IBC	INTERNATIONAL BUILDING CODE ®
ILO	IN LIEU OF
IN	INCH
INCL	INCLUDE
INSUL	INSULATION
INT	INTERIOR
IRC	INTERNATIONAL RESIDENTIAL CODE ®
JC	JANITOR'S CLOSET
LBS	POUNDS
M=LAM	TRUS JOIST ® MICROLAM ®
MAX	MAXIMUM
MECH	MECHANICAL
MANUF	MANUFACTURER
M.O.	MASONRY OPENING
MTD	MOUNTED
MTL	METAL
N/A	NOT APPLICABLE
N.I.C.	NOT IN CONTRACT
#	NUMBER, POUND
NO	NUMBER
NTS	NOT TO SCALE
O.C.	ON CENTER
OPER	OPERABLE
OPNG	OPENING
OPP	OPPOSITE
PE	PROFESSIONAL ENGINEER
PERF	PERFORATED
PERIM	PERIMETER
PLF	POUNDS PER LINEAL FOOT
PLM	PLASTIC LAMINATE
PLYWD	PLYWOOD
PME	PLUMBING / MECHANICAL / ELECTRICAL
PREFAB	PREFABRICATED
PSL	TRUSS JOIST ® PARALLEL STRAND LUMBER
PSI	POUNDS PER SQUARE INCH
PT	PAINT
PVC	POLYVINYL CHLORIDE
QT	QUARRY TILE
QTY	QUANTITY
RA	REGISTERED ARCHITECT
RB	RUBBER WALL BASE
REINF'D	REINFORCED
REQ'D	REQUIRED
R.O.	ROUGH OPENING
SF	SQUARE FEET
SHT	SHEET
SIM	SIMILAR
SPEC	SPECIFICATION
SQ	SQUARE
STC	SOUND TRANSMISSION CLASS
STD	STANDARD
STL	STEEL
STRUCT	STRUCTURAL
T&G	TONGUE & GROOVE
TCA	TILE COUNCIL OF AMERICA
THK	THICK
TJI	TRUS-JOIST ® JOISTS
TRTD	TREATED
TYP	TYPICAL
T.M.E.	TO MATCH EXISTING
UL	UNDERWRITERS' LABORATORY
U.N.O.	UNLESS NOTED OTHERWISE
VCT	VINYL COMPOSITION TILE
VERT	VERTICAL
VUSBC	VIRGINIA UNIFORM STATEWIDE BUILDING CODE
W/	WITH
W/IN	WITHIN
W/OUT	WITHOUT
WD	WOOD
WGB	WATER-RESISTANT G.W.B.

GENERAL NOTES

1. WHERE NOT OTHERWISE SPECIFIED, ALL WORKMANSHIP AND MATERIAL QUALITY TO BE IN KEEPING WITH RESPECTIVE INDUSTRIES AT A MINIMUM. R.S. MEANS "RESIDENTIAL AND LIGHT COMMERCIAL CONSTRUCTION STANDARDS" TO SERVE AS REFERENCE OF QUALITY STANDARDS.
2. IF ERRORS, CONFLICTS, OR OMISSIONS ARE DISCOVERED IN THE DRAWINGS / PROJECT MANUAL, CONSULT THE ARCHITECT PRIOR TO OBTAINING BUILDING MATERIALS AND/OR CONSTRUCTION.
3. DIMENSIONS ARE DRAWN TO FACE OF STUD OR FACE OF MASONRY UNLESS OTHERWISE INDICATED.
4. VERIFY / COORDINATE UTILITY REVISIONS WITH REQUIREMENTS FOR NEW WORK (INCLUDING GAS AND ELECTRIC METERS OR TRANSFORMERS).
5. VERIFY SURFACE DRAINAGE AT ALL EXTERIOR DOOR LANDINGS SLOPING AWAY FROM DOOR(S) AT A RATIO OF EXACTLY ¼ : 12 FOR A DISTANCE OF FIVE FEET, MIN.
6. VERIFY MECHANICAL EQUIPMENT AND DUCT RUN LAYOUT / SIZES / CONDENSATE LINE TERMINATIONS PRIOR TO CONSTRUCTION.
7. VERIFY EXHAUST LINES / LOUVERS / ROOF VENTS PRIOR TO CONSTRUCTION.

No.	REVISIONS	DATE	BY
	BID SET		

Kimley»Horn
4500 MAIN STREET, SUITE 500, VIRGINIA BEACH, VA 23462
PHONE: 757-213-8600 FAX: 757-213-8601
WWW.KIMLEY-HORN.COM

COMMONWEALTH OF VIRGINIA
JOHN A. HOPKE
Lic. No. 6663
04/04/2016
ARCHITECT

H&A PROJECT: 36021
DATE: 09/09/2016
DESIGNED BY JEH
DRAWN BY MSK
CHECKED BY JEH

TITLE SHEET & GENERAL NOTES

HOPKE & ASSOCIATES INC.
ARCHITECTURE ■ PLANNING ■ INTERIORS
1106 Jamestown Road, Suite C
Williamsburg, VA 23185
757-220-1999 Phone
757-220-1969 Facsimile
www.hopke.com

JOSEPH W. LUTER, JR SPORTS COMPLEX BUILDINGS
TOWN OF SMITHFIELD
ISLE OF WIGHT COUNTY, VIRGINIA

SHEET NUMBER
T1.1

This document, together with the concepts and designs presented herein, as an instrument of service, is intended only for the specific purpose and client for which it was prepared. Reuse of and improper reliance on this document without written authorization and adaptation by Kimley-Horn and Associates, Inc. shall be without liability to Kimley-Horn and Associates, Inc.

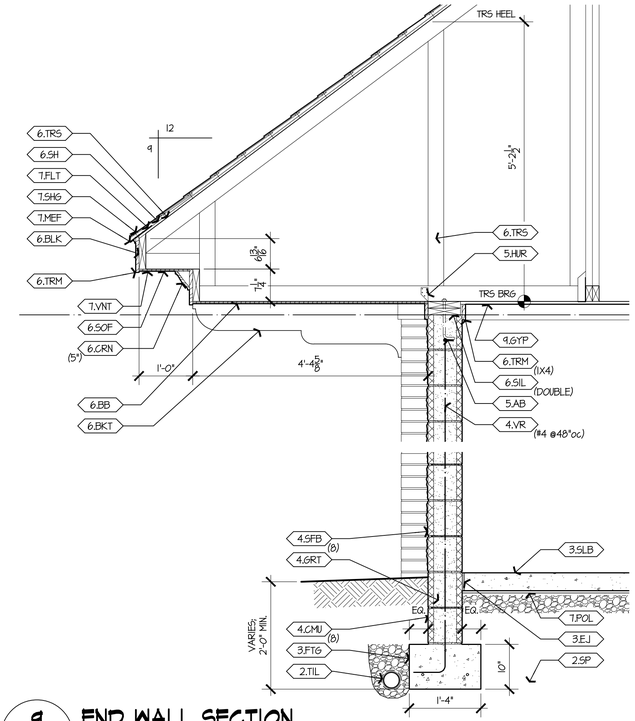

9 A1.3 END WALL SECTION

X-X

SCALE: 3/4" = 1'-0"

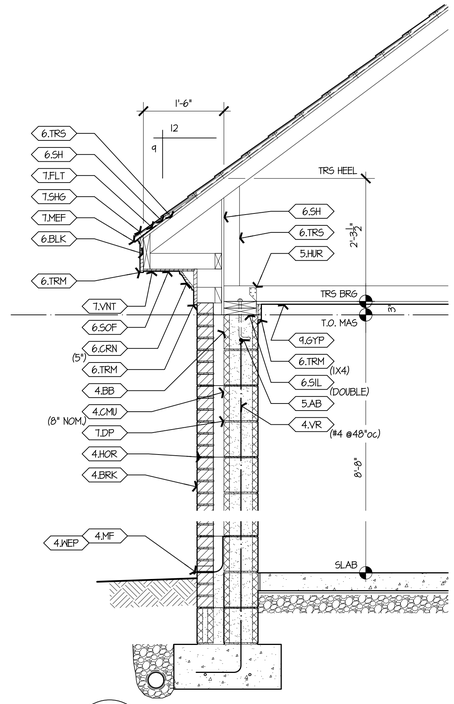

8 A1.3 TYP WALL SECTION

X-X

SCALE: 3/4" = 1'-0"

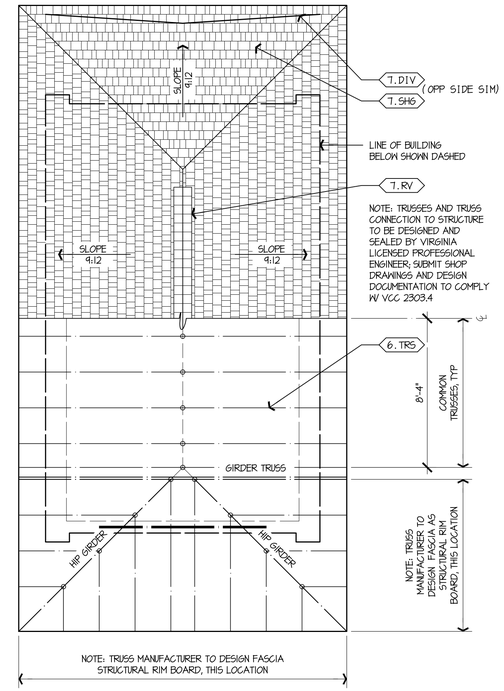

6 A1.3 ROOF & FRAMING PLAN

SCALE: 1/4" = 1'-0"

MATERIALS KEYING: A1.3 SMALL RESTROOM BUILDING

DIVISION 2: SITE AND DEMOLITION

2.SP SOIL POISON, SEE SPECIFICATIONS
2.TIL 4" PERF. DRAIN TILE

DIVISION 3: CONCRETE

3.EJ 1/2" CONCRETE EXPANSION JOINT
3.FTG CONCRETE FOOTING; SEE STRUCTURAL
3.SLB 4" CONC. SLAB W/6x6 10/10 WELDED WIRE MESH OR SYNTHETIC FIBER REINFORCEMENT DOSED AT 1.5#/C.Y. OVER 6-MIL POLY ON COMPACT SAND/GRAVEL FILL

DIVISION 4: MASONRY

4.BB CMU BOND BEAM W/(2) #4's CONT. (OPTIONAL)
4.BRK 4" STANDARD BRICK
4.CMU 8 x 8 x 16 NOM. CMU OR DIMENSIONS AS NOTED OTHERWISE
4.GRT GROUT SOLID
4.MF MASONRY FLASHING
4.SFB SPLIT-FACE BLOCK CMU
4.SOL BRICK SOLDIER COURSE
4.VR VERTICAL REINF: #4's @ 4'-0" O.C. MIN.; GROUT SOLID @ EACH LOCATION

DIVISION 5: METALS

5.AB 1/2" x 9" (MIN.) ANCHOR BOLTS @ 6'-0" o.c., MIN. (2) ANCHORS PER SECTION OF PLATE AND (1) PLACED W/IN 12" OF EA. END OF EA. PLATE; GROUT CMU SOLID AT EA. LOC.
5.HUR HURRICANE CLIPS @ 32" O.C.

DIVISION 6: WOOD AND PLASTIC

6.BB BEAD BOARD PREFINISHED SOFFIT PANELS; SEE SPECS
6.BKT DECORATIVE, SOLID WOOD BRACKET
6.BLK 2 x WD. BLOCKING
6.CRN CROWN MOULD
6.FAS FASCIA BOARD
6.SH SHEATHING: ROOF SHEATHING -- 5/8" CDX PLYWOOD; WALL SHEATHING -- 1/2" PLYWOOD
6.SIL 2x TREATED SILL PLATE
6.SOF 1x SOFFIT BOARDS
6.TRM 1x WD TRIM (SIZE INDICATED)
6.TRS WOOD TRUSSES DESIGNED BY MFR; SUBMIT PE SEALED SHOP DRAWINGS FOR APPROVAL; SEE STRUCTURAL DRAWINGS

DIVISION 7: THERMAL AND MOISTURE PROTECTION

7.DIV METAL RAIN DIVERTER
7.FLT 15# BUILDING FELT
7.MEF METAL EDGE FLASHING
7.MF CONT. METAL FLASHING (COPPER, TYP.)
7.POL 6-MIL POLY VAPOR BARRIER
7.RV RIDGE VENT
7.VNT 2" CONT. ALUM. OR VINYL SCREEN VENT

DIVISION 8: DOORS AND WINDOWS

8.OH OVERHEAD DOOR

DIVISION 9: FINISHES

9.GYP 5/8" GYPSUM BOARD (PAINTED)

DIVISION 10: SPECIALTIES

10.6B ADA COMPLIANT GRAB BAR
10.TPD TOILET PAPER DISPENSER

DIVISION 15: MECHANICAL

15.DF ADA COMPLIANT DUAL-HEIGHT DRINKING FOUNTAIN
15.LAV LAVATORY
15.WC WATER CLOSET

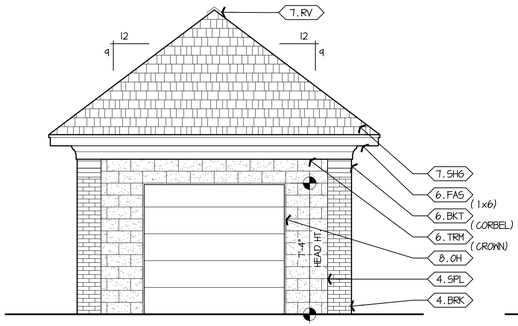

5 A1.3 REAR ELEVATION

A1.3

SCALE: 1/4" = 1'-0"

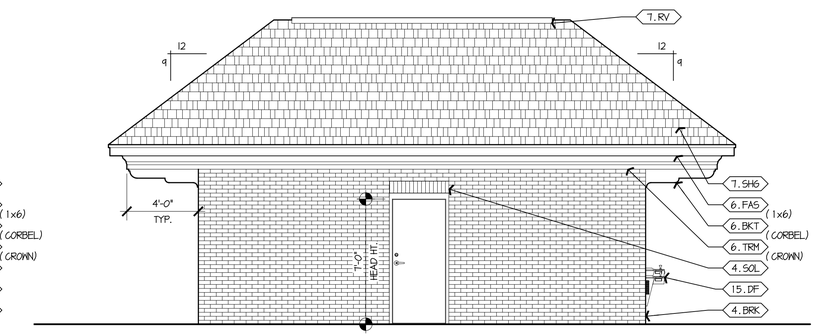

3 A1.3 RIGHT SIDE ELEVATION

A1.3

SCALE: 1/4" = 1'-0"

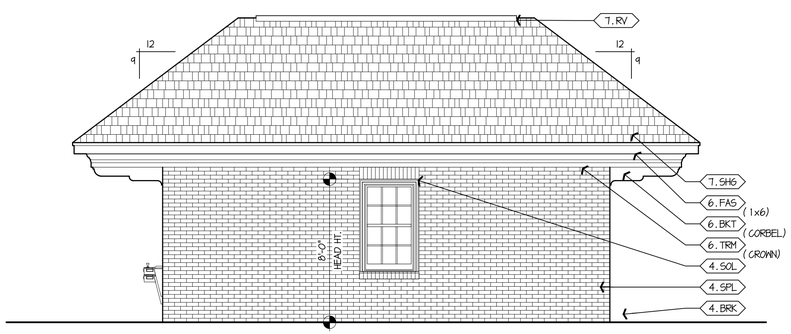

4 A1.3 LEFT SIDE ELEVATION

A1.3

SCALE: 1/4" = 1'-0"

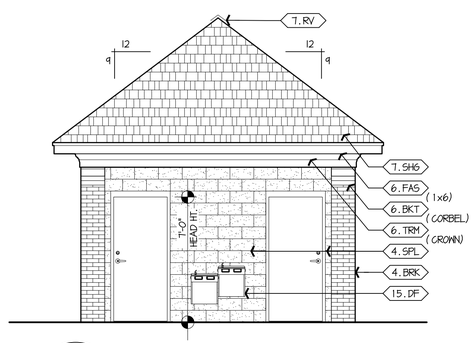

2 A1.3 FRONT ELEVATION

A1.3

SCALE: 1/4" = 1'-0"

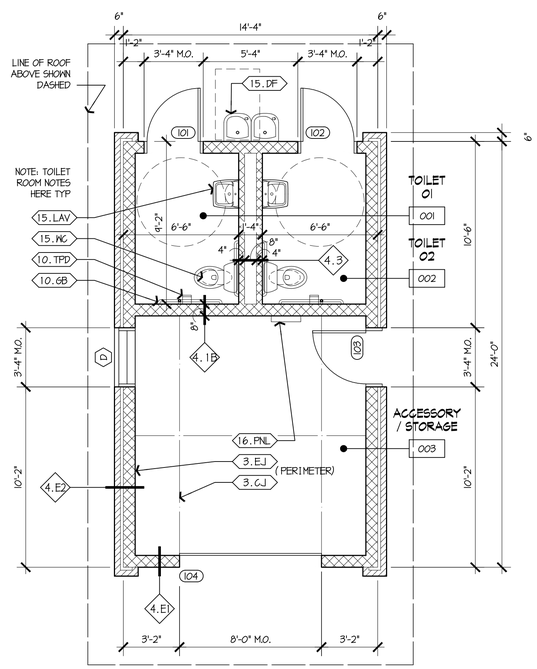

1 A1.3 PLAN

SCALE: 63/256" = 1'-0"

No.	REVISIONS	DATE	BY
	BID SET		

Kimley»Horn
4500 MAIN STREET, SUITE 500, VIRGINIA BEACH, VA 23462
PHONE: 757-213-8600 FAX: 757-213-8601
WWW.KIMLEY-HORN.COM

COMMONWEALTH OF VIRGINIA
JOHN A. HOPKE
Lic. No. 6663
09/09/2016
ARCHITECT

H&A PROJECT: 36021
DATE: 09/09/2016
DESIGNED BY: JAH
DRAWN BY: MSK
CHECKED BY: JEH

RESTROOM BLDG. PLANS & ELEVS.

HOPKE & ASSOCIATES INC.
ARCHITECTURE ■ PLANNING ■ INTERIORS
1106 Jamestown Road, Suite C
Williamsburg, VA 23185
757-220-0550 Telephone
www.hopke.com

JOSEPH W. LUTER, JR SPORTS COMPLEX CONCESSIONS BUILDINGS
TOWN OF SMITHFIELD
ISLE OF WIGHT COUNTY, VIRGINIA

SHEET NUMBER
A1.3

This document, together with the concepts and designs presented herein, as an instrument of service, is intended only for the specific purpose and client for which it was prepared. Reuse of and improper reliance on this document without written authorization and adaptation by Kimley-Horn and Associates, Inc. shall be without liability to Kimley-Horn and Associates, Inc.

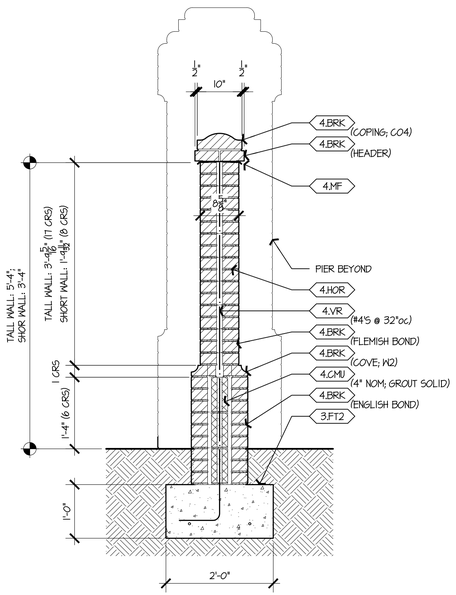

4 A1.4 SITE WALL SECTION

SCALE: 3/4" = 1'-0"

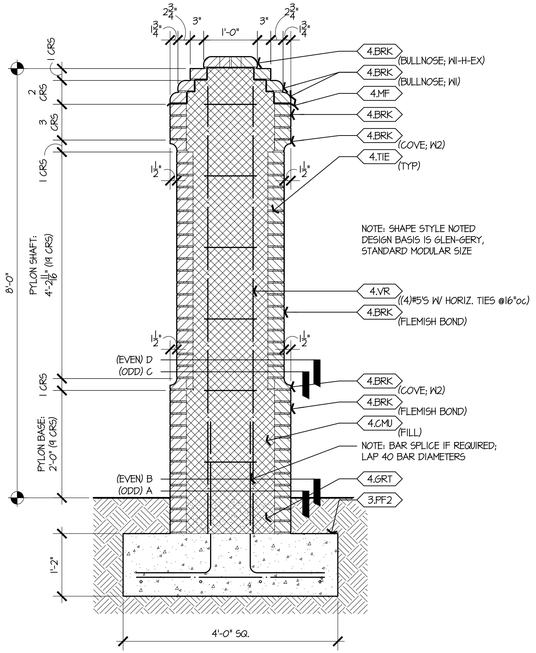

5 A1.4 PYLON SECTION DETAIL

SCALE: 3/4" = 1'-0"

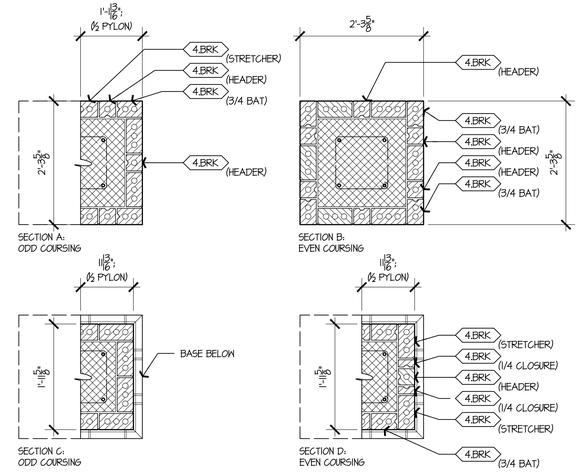

6 A1.4 SITE WALL PYLON PLAN DETAIL

SCALE: 3/4" = 1'-0"

MATERIALS KEYING: A1.4 ENTRY GATEWAY PLAN AND DETAILS

DIVISION 3: CONCRETE

3.FT2 24" WIDE x 12" DEEP CONT. CONC. FT6 W/(2) #4's AT BOT
3.PF2 48" x 48" x 14" DEEP CONCRETE PYLON FOOTING WITH (4) #4's EA WAY AT BOT
3.SGN ARCHITECTURAL PRECAST CONCRETE PANEL(S); INSTALL INTO CURVED BRICK WALL FLUSH WITH FACE OF BRICK

DIVISION 4: MASONRY

4.BRK 4" STANDARD BRICK
4.CMU 8 x 8 x 16 NOM. CMU OR DIMENSIONS AS NOTED OTHERWISE
4.HOR HORIZ. JOINT REINF. AT EA. COURSE BELOW GRADE AND AT EVERY OTHER COURSE ABOVE GRADE
4.MF MASONRY FLASHING
4.PYL MASONRY PYLON
4.TIE MASONRY VENEER TIE
4.VR VERTICAL REINF; #4's @ 4'-0" O.C. MIN.; GROUT SOLID @ EACH LOCATION
4.WAL BRICK MASONRY WALL

DIVISION 10: SPECIALTIES

10.LTR EXTRUDED ALUMINUM LETTERING; FASTEN TO PRECAST PANEL WITH STAINLESS STEEL FASTENERS; MOCK-UP LAYOUT FOR OWNER APPROVAL; SEE SPECS

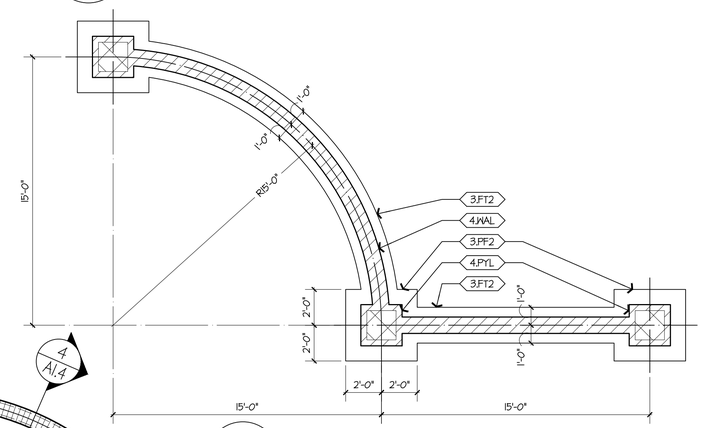

7 A1.4 SITE WALL PARTIAL FNDTN PLAN

SCALE: 1/4" = 1'-0"

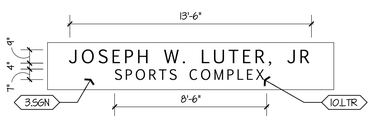

3 A1.4 SIGN PANEL SCHEMATIC

SCALE: 1/4" = 1'-0"

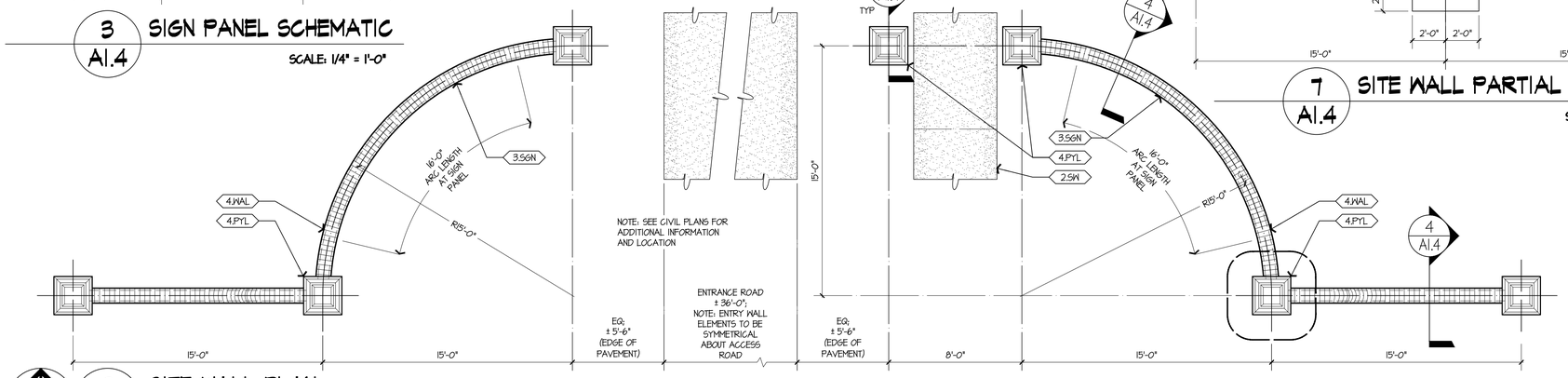

2 A1.4 SITE WALL PLAN

SCALE: 1/4" = 1'-0"

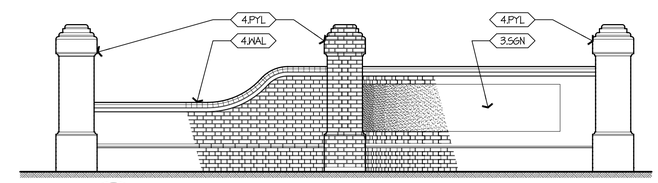

1 A1.4 SITE WALL ELEVATION

SCALE: 1/4" = 1'-0"

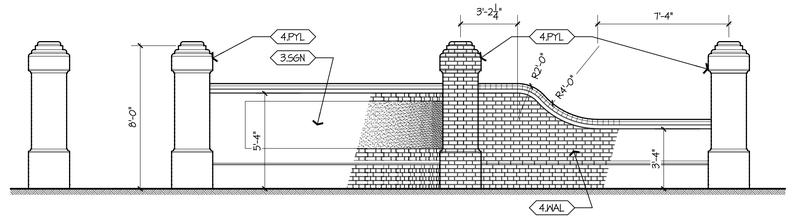

No.	REVISIONS	DATE	BY
	BID SET		

Kimley»Horn
4500 MAIN STREET, SUITE 500, VIRGINIA BEACH, VA 23462
PHONE: 757-213-8600 FAX: 757-213-8601
WWW.KIMLEY-HORN.COM

COMMONWEALTH OF VIRGINIA
JOHN A. HOPKE
Lic. No. 6663
04/04/2016
ARCHITECT

H&A PROJECT: 36021
DATE: 09/09/2016
DESIGNED BY
DRAWN BY MSK
CHECKED BY

ENTRY GATE PLAN & DETAILS

HOPKE & ASSOCIATES INC.
ARCHITECTURE ▪ PLANNING ▪ INTERIORS
1108 Jamestown Road, Suite C
Williamsburg, VA 23185
757-220-0089 Fax: 220-0099
www.hopke.com

JOSEPH W. LUTER, JR SPORTS COMPLEX CONCESSIONS BUILDINGS
TOWN OF SMITHFIELD
ISLE OF WIGHT COUNTY, VIRGINIA

SHEET NUMBER
A1.4

This document, together with the concepts and designs presented herein, as an instrument of service, is intended only for the specific purpose and client for which it was prepared. Reuse of and improper reliance on this document without written authorization and adaptation by Kimley-Horn and Associates, Inc. shall be without liability to Kimley-Horn and Associates, Inc.

DOOR SCHEDULE: LARGE CONCESSIONS BUILDING					
NO.	SIZE	TYPE	FRAME	HDW	REMARKS
101	3'-0" x 7'-0" x 1-3/4"	FLUSH FIBERGL	FIBERGL	EXTER (1)	INCL. CLOSER
102	3'-0" x 7'-0" x 1-3/4"	FLUSH FIBERGL	FIBERGL	EXTER (1)	
103A	3'-0" x 4'-0" x 1-3/4"	FLUSH WD	WD	EXTER (2)	HALF DOORS FOR TRANSACTION WINDOW
103B	3'-0" x 4'-0" x 1-3/4"	FLUSH WD	WD	EXTER (2)	HALF DOORS FOR TRANSACTION WINDOW
104	3'-0" x 7'-0" x 1-3/4"	FLUSH FIBERGL	FIBERGL	EXTER (1)	
105	3'-0" x 7'-0" x 1-3/4"	FLUSH WD	FIBERGL	INTER	
106	3'-0" x 7'-0" x 1-3/4"	FLUSH FIBERGL	FIBERGL	EXTER (1)	
107	3'-0" x 7'-0" x 1-3/4"	INSUL. FIBERGL	FIBERGL	EXTER (1)	
108	3'-0" x 7'-0" x 1-3/4"	FLUSH FIBERGL	FIBERGL	EXTER (1)	
109	PR 3'-0" x 7'-0" x 1-3/4"	INSUL. FIBERGL	FIBERGL	EXTER (1)	
110	9'-0" X 7'-0" OH DR	FIBERGLASS	WD		HARDWARE PER MFR'S STANDARD OFFERINGS
111	3'-0" x 7'-0" x 1-3/4"	FLUSH FIBERGL	FIBERGL	EXTER (1)	
112	3'-0" x 7'-0" x 1-3/4"	FLUSH FIBERGL	FIBERGL	EXTER (1)	
113	3'-0" x 7'-0" x 1-3/4"	FLUSH FIBERGL	FIBERGL	EXTER (1)	INCL CLOSER
114	3'-0" x 7'-0" x 1-3/4"	FLUSH FIBERGL	FIBERGL	EXTER (1)	INCL. CLOSER
115	3'-0" x 7'-0" x 1-3/4"	INSUL. FIBERGL	FIBERGL	EXTER (1)	
	NOTES:				
1	ALL EXTERIOR DOORS TO HAVE METAL SILL STRIPS AND WEATHERSTRIPPING				
2	PROVIDE WEATHER STRIPPING AND Z-FLASH AT SILL TO INHIBIT RAIN PENETRATION				
DOOR SCHEDULE: SMALL RESTROOM BUILDING					
NO.	SIZE	TYPE	FRAME	HDW	REMARKS
101	3'-0" x 7'-0" x 1-3/4"	FLUSH FIBERGL	FIBERGL	EXTER (1)	INCL. CLOSER
102	3'-0" x 7'-0" x 1-3/4"	FLUSH FIBERGL	FIBERGL	EXTER (1)	INCL. CLOSER
103	3'-0" x 7'-0" x 1-3/4"	FLUSH FIBERGL	FIBERGL	EXTER (1)	
104	9'-0" X 7'-0" OH DR	FIBERGLASS	WD		HARDWARE PER MFR'S STANDARD OFFERINGS
	NOTES:				
1	ALL EXTERIOR DOORS TO HAVE METAL SILL STRIPS AND WEATHERSTRIPPING				

3 / A2.1 **DOOR SCHEDULE**

A1.1

NO SCALE

MATERIALS KEYING: A2.1 BUILDING ELEVATIONS

DIVISION 3: CONCRETE

3.APC ARCHITECTURAL PRECAST CONCRETE (SIZE AND SHAPE INDICATED)

DIVISION 4: MASONRY

4.SPB SPLIT-FACE BLOCK CMU
4.SOL BRICK SOLDIER COURSE, STEP OUT 1/2"

DIVISION 5: METALS

5.RAL METAL GUARD RAIL SYSTEM
5.STR PREFABRICATED STEEL STAIR SYSTEM WITH LANDING; PROVIDE SHOP DRAWINGS

DIVISION 6: WOOD AND PLASTIC

6.CB 1x4 CORNER BOARD TRIM, TYP.
6.FAS FASCIA BOARD
6.LAT WOOD LATTICE CONSTRUCTED OF 2X2 TRD HORIZONTALS OVER 2X2 VERTICALS SPACED AT 4"oc; PAINT WITH SOLID COLOR STAIN TO MATCH TRIM
6.PIL PILASTER TRIM WRAP
6.SID 3/4" BEVELED SIDING W/ 6" EXPOSURE; SEE SPECS
6.TRM 1x WD TRIM (SIZE INDICATED)

DIVISION 7: THERMAL AND MOISTURE PROTECTION

7.MBR PVC MEMBRANE ROOFING AND FLASHING SYSTEM
7.SHG FIBERGLASS SHINGLES W/ 15# FELT

DIVISION 10: SPECIALTIES

10.AWN FABRIC AWNING SYSTEM AS DESIGNED BY MFR; PROVIDE WITH ALUM/STL SUPPORT STRUCTURE FASTENED TO CMU WALL; SUBMIT PE SEALED SHOP DRAWINGS
10.VAN PREFABRICATED WEATHER VANE; SEE SPEC'S; INSTALL PER MFR. REQUIREMENTS

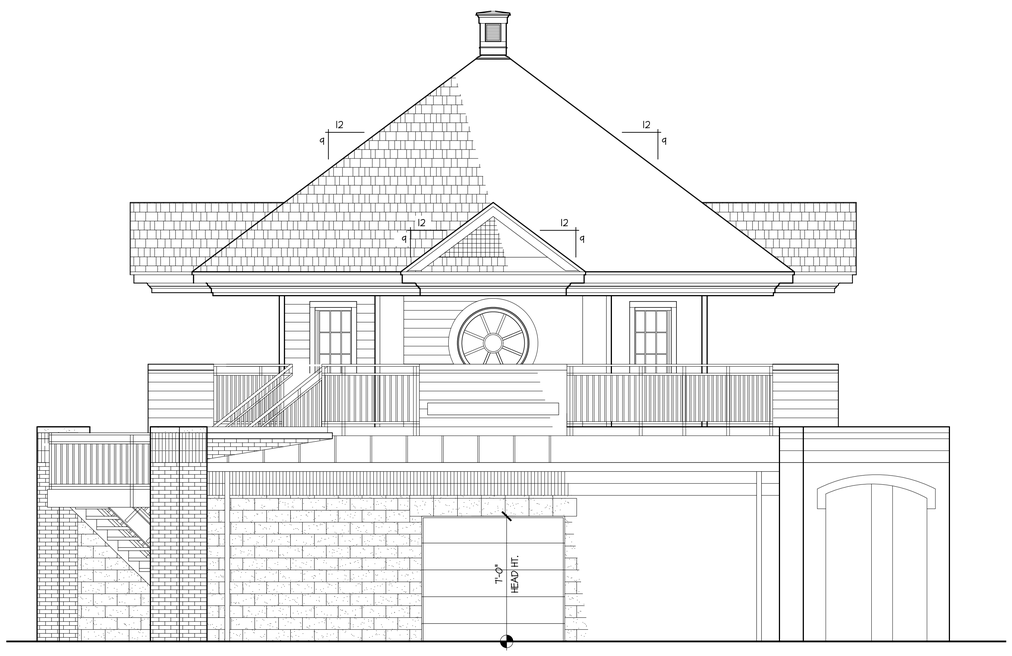

2 / A2.1 **NORTHWEST ELEVATION**

A1.1

SCALE: 1/4" = 1'-0"

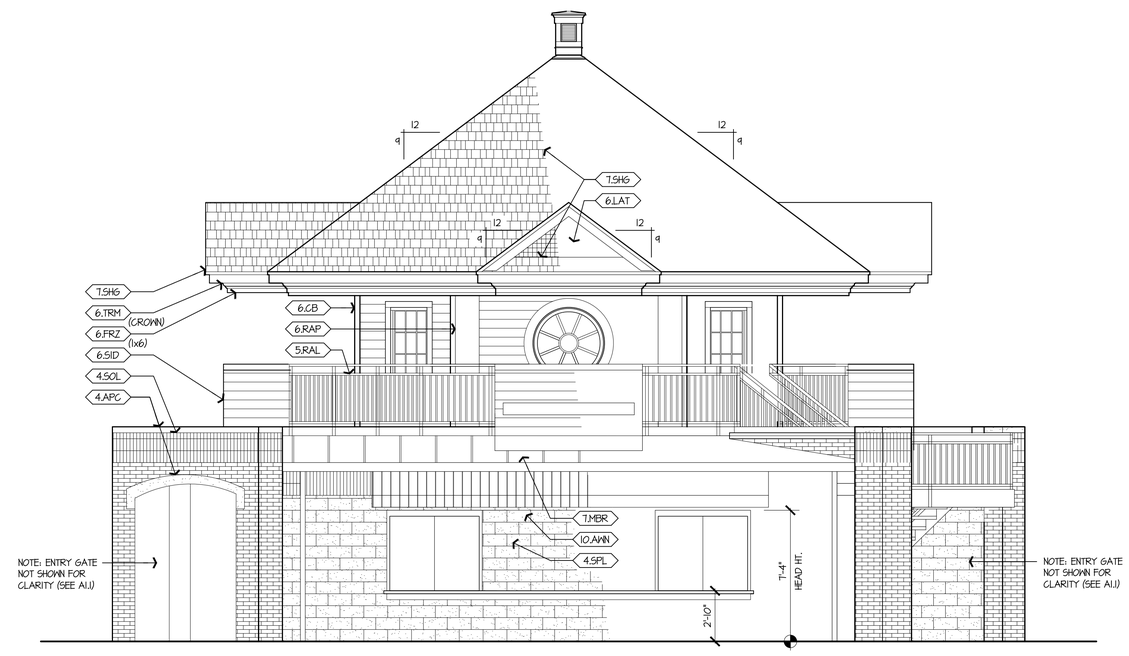

1 / A2.1 **NORTHEAST ELEVATION**

A1.1

SCALE: 1/4" = 1'-0"

No.	REVISIONS	DATE	BY
	BID SET		

Kimley»Horn
4500 MAIN STREET, SUITE 500, VIRGINIA BEACH, VA 23462
PHONE: 757-213-8600 FAX: 757-213-8601
WWW.KIMLEY-HORN.COM

COMMONWEALTH OF VIRGINIA
JOHN A. HOPKE
Lic. No. 6663
09/09/2016
ARCHITECT

H&A PROJECT: 36021
DATE 09/09/2016
DESIGNED BY
DRAWN BY
CHECKED BY

BUILDING ELEVATIONS

HOPKE & ASSOCIATES INC.
ARCHITECTURE ■ PLANNING ■ INTERIORS
1156 Jamestown Road, Suite C
Williamsburg, VA 23185
757-220-0000 Telephone
757-220-0060 Facsimile
www.hopke.com

JOSEPH W. LUTER, JR SPORTS COMPLEX CONCESSIONS BUILDINGS
TOWN OF SMITHFIELD
ISLE OF WIGHT COUNTY, VIRGINIA

SHEET NUMBER
A2.1

This document, together with the concepts and designs presented herein, as an instrument of service, is intended only for the specific purpose and client for which it was prepared. Reuse of and improper reliance on this document without written authorization and adaptation by Kimley-Horn and Associates, Inc. shall be without liability to Kimley-Horn and Associates, Inc.

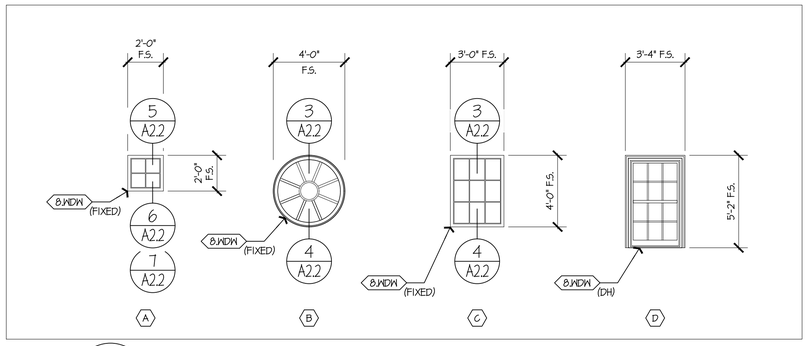

8 A2.2 **WINDOW ELEVATIONS**

A1.1, A1.2, A1.3

SCALE: 1/4" = 1'-0"

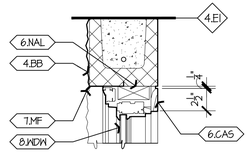

5 A2.2 **HEAD DTL B**

SCALE: 1 1/2" = 1'-0"

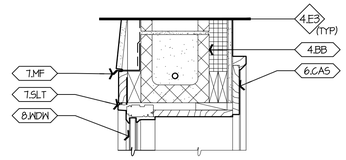

3 A2.2 **HEAD DTL A**

SCALE: 1 1/2" = 1'-0"

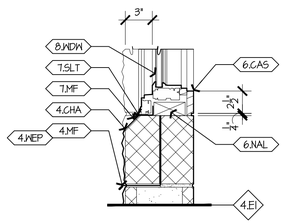

7 A2.2 **SILL DTL C**

SCALE: 1 1/2" = 1'-0"

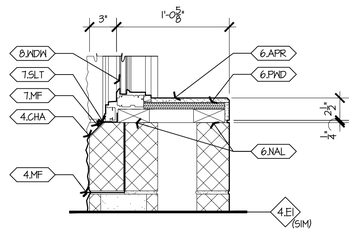

6 A2.2 **SILL DTL B**

SCALE: 1 1/2" = 1'-0"

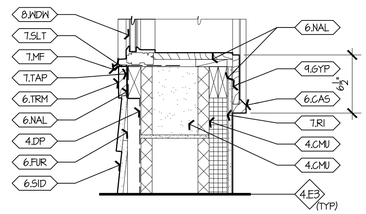

4 A2.2 **SILL DTL A**

SCALE: 1 1/2" = 1'-0"

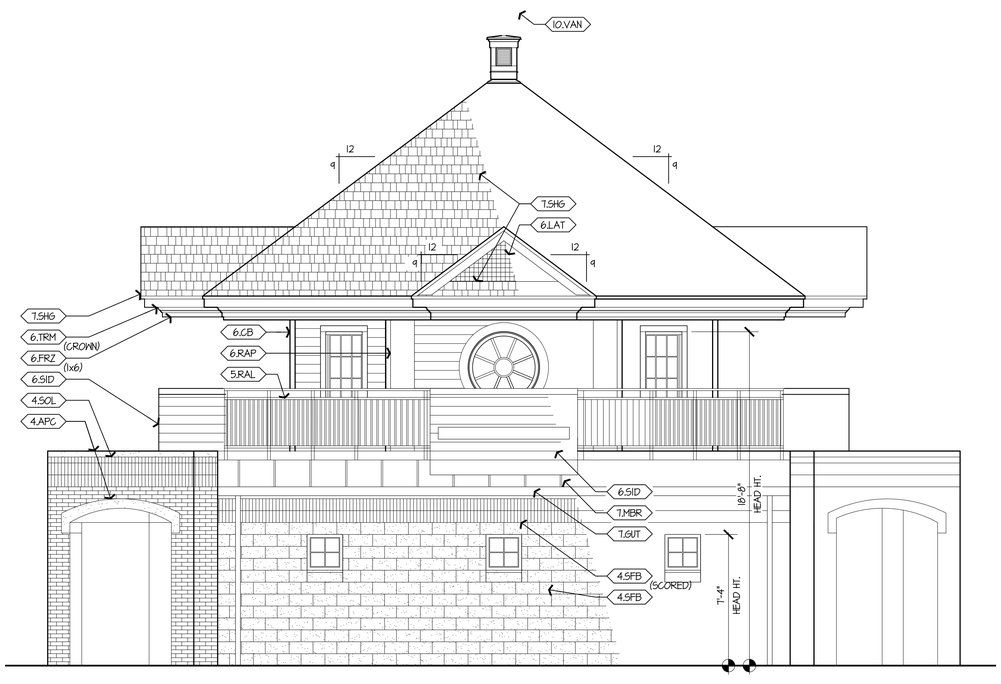

2 A2.2 **SOUTHEAST ELEVATION**

A1.1

SCALE: 1/4" = 1'-0"

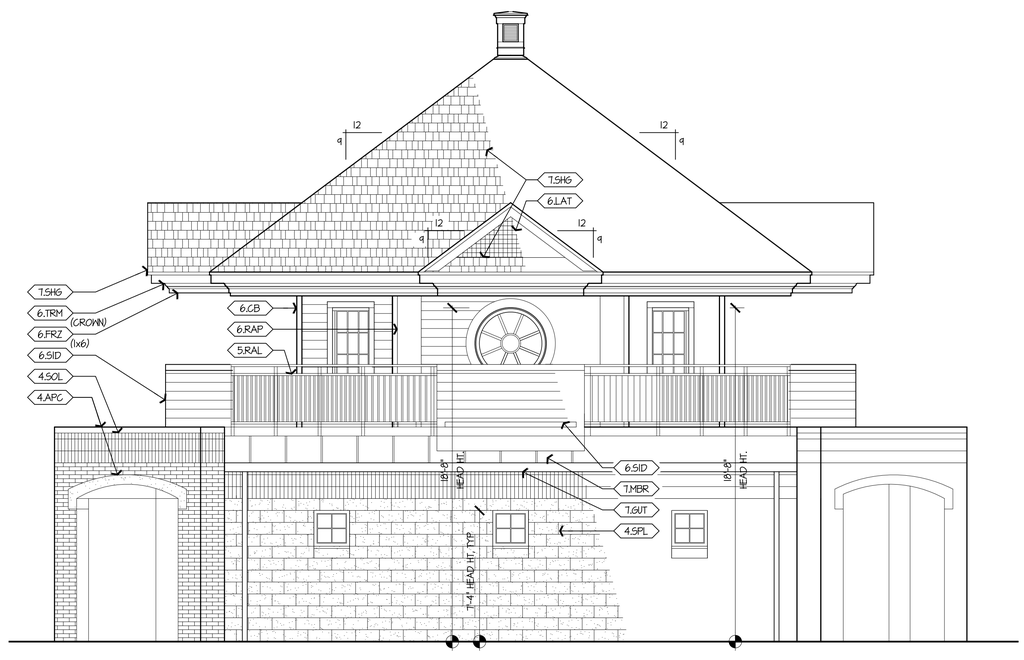

1 A2.2 **SOUTHWEST ELEVATION**

A1.1

SCALE: 1/4" = 1'-0"

MATERIALS KEYING: A2.2 BUILDING ELEVATIONS

DIVISION 3: CONCRETE

3.APC ARCHITECTURAL PRECAST CONCRETE (SIZE AND SHAPE INDICATED)

DIVISION 4: MASONRY

4.BB CMU BOND BEAM W/(2) #4's CONT. (OPTIONAL)
4.BRK 4" STANDARD BRICK
4.CHA CHAMFERED CMU SPLIT FACE BLOCK SILL
4.CMU 8 x 8 x 16 NOM. CMU OR DIMENSIONS AS NOTED OTHERWISE
4.MF MASONRY FLASHING
4.SFB SPLIT-FACE BLOCK CMU
4.SIL BRICK ROWLOCK SILL
4.SOL BRICK SOLDIER COURSE
4.WEP WEEP HOLES @ 32" O.C.

DIVISION 5: METALS

5.RAL METAL GUARD RAIL SYSTEM

DIVISION 6: WOOD AND PLASTIC

6.APR SOLID SURFACE APRON/SHELF
6.CAS WD CASING (PROFILE INDICATED)
6.CB 1x4 CORNER BOARD TRIM, TYP.
6.FAS FASCIA BOARD
6.FUR 1x TRTD FURRING AT 16" O.C.
6.LAT WOOD LATTICE CONSTRUCTED OF 2X2 TRD HORIZONTALS OVER 2X2 VERTICALS SPACED AT 4"oc; PAINT WITH SOLID COLOR STAIN TO MATCH TRIM
6.PIL PILASTER TRIM WRAP
6.PWD 5/8" PLYWOOD, UNO
6.RAL WOOD RAILING SYSTEM
6.SID 3/4" BEVELED SIDING W/ 6" EXPOSURE; SEE SPECS
6.TRM 1x WD TRIM (SIZE INDICATED)

DIVISION 7: THERMAL AND MOISTURE PROTECTION

7.GUT METAL GUTTER SYSTEM
7.MBR PVC MEMBRANE ROOFING AND FLASHING SYSTEM
7.MEF METAL EDGE FLASHING
7.MF CONT. METAL FLASHING (COPPER, TYP.)
7.RI RIGID INSULATION
7.SHG FIBERGLASS SHINGLES W/ 15# FELT
7.SLT SEALANT
7.TYV 'TYVEK' OR EQUIVALENT AIR INFILTRATION BARRIER

DIVISION 8: DOORS AND WINDOWS

8.WDW NEW WINDOW

DIVISION 9: FINISHES

9.GYP 5/8" GYPSUM BOARD (PAINTED)

DIVISION 10: SPECIALTIES

10.VAN PREFABRICATED WEATHER VANE; SEE SPEC'S; INSTALL PER MFR. REQUIREMENTS

No.	REVISIONS	DATE	BY
	BID SET		

Kimley»Horn
4500 MAIN STREET, SUITE 500, VIRGINIA BEACH, VA 23462
PHONE: 757-213-8600 FAX: 757-213-8601
WWW.KIMLEY-HORN.COM

COMMONWEALTH OF VIRGINIA
JOHN A. HOPKE
Lic. No. 6663
04/04/2016
ARCHITECT

H&A PROJECT: 36021
DATE: 09/09/2016
DESIGNED BY JEH
DRAWN BY MSK
CHECKED BY JEH

BUILDING ELEVATIONS, CTD.

HOPKE & ASSOCIATES INC.
ARCHITECTURE ■ PLANNING ■ INTERIORS
1156 Jamestown Road, Suite C
Williamsburg, VA 23185
757-220-0000 Telephone
www.hopke.com

JOSEPH W. LUTER, JR SPORTS COMPLEX CONCESSIONS BUILDINGS
TOWN OF SMITHFIELD
ISLE OF WIGHT COUNTY, VIRGINIA

SHEET NUMBER
A2.2

This document, together with the concepts and designs presented herein, as an instrument of service, is intended only for the specific purpose and client for which it was prepared. Reuse of and improper reliance on this document without written authorization and adaptation by Kimley-Horn and Associates, Inc. shall be without liability to Kimley-Horn and Associates, Inc.