TRAFFIC IMPACT STUDY

FOR

CARY & MAIN

IN

TOWN OF SMITHFIELD, VA

COMMONWEALTH OF VIRGINIA
VALERIE J. HENCHEL
Lic. No. 017590
2/24/2015
PROFESSIONAL ENGINEER

INTERMODAL ENGINEERING, P.C.
FEBRUARY, 2015

Cary & Main subdivision is a proposed residential development off of Main Street, north of Route 10 Bypass, in Isle of Wight, VA. Intermodal Engineering, P.C. was retained by Hearndon Construction to perform a traffic impact analysis for this development to determine its impact on the existing road system. The analysis considers existing conditions and post development impacts on the adjacent roadways, as well as, identifies any needed modifications to minimize these impacts and provide adequate access to the development.

This memorandum summarizes the traffic impact analysis, identifies the procedures and assumptions used in its development and also identifies the road system requirements.

PROJECT DESCRIPTION

The proposed Cary & Main subdivision development will construct 152 single houses. The proposed site is approximately 58 acres on the west side of Main Street in the Town of Smithfield, VA. The site is currently zoned C-C, Community Conservation, and the proposed zoning is DN-R, Downtown Neighborhood Residential. The main access to Cary &

Main will be at an entrance off Main Street approximately 800 feet north of Route 10 Bypass. There will also be two secondary accesses: one to Cary Street across from Goose Hill Way and the other providing a connection from the main access to Grace Street.

EXISTING ROADWAY NETWORK

The existing major roadways adjacent to the site are as follows:

1) Main Street (Bus. Rt. 258) is a two-lane north-south roadway with a 25 mile per hour speed limit in the vicinity of the site. Main Street runs north into downtown Smithfield and south, becoming Courthouse Highway, toward Windsor, VA.

2) Route 10 Bypass is a two-lane east-west roadway with a speed limit of 45 miles per hour. In the vicinity of the site, Route 10 Bypass runs east past Benns Church and west to Surry. Its intersection with Main Street is signalized.

3) Cary Street is a two-lane east-west roadway with a 30 mile per hour speed limit in the vicinity of the site. Cary Street runs west overpassing Route 10 becoming Mill Swamp Road and east to Main Street with the block between Grace Street and Main Street being one-way westbound.

4) Grace Street is a two-lane roadway with a 25 mile per hour speed limit. Grace Street curves to connect Main Street and Cary Street.

TRAFFIC COUNT DATA

Present traffic demand in the study area was determined from a review of traffic count data. Manual intersection turning movement count was conducted by Intermodal Engineering, P.C. at Main Street and Route 10 Bypass and at Main Street and Grace Street from 7am to 9am and from 4pm to 6pm during the typical week of February 2, 2015.

Automatic 24-hour traffic counts were also conducted by Intermodal Engineering, P.C. during the week of February 2, 2015 and indicate the following existing two-way through volume in the vicinity of the site:

Main Street (b/t Rt 10 Bypass & Grace)	8,470 vpd
Cary Street (b/t Grace & Overpass)	2,961 vpd
Grace Street (b/t Main & Cary)	3,458 vpd

The traffic volumes are indicated on Figures 1 and 2.

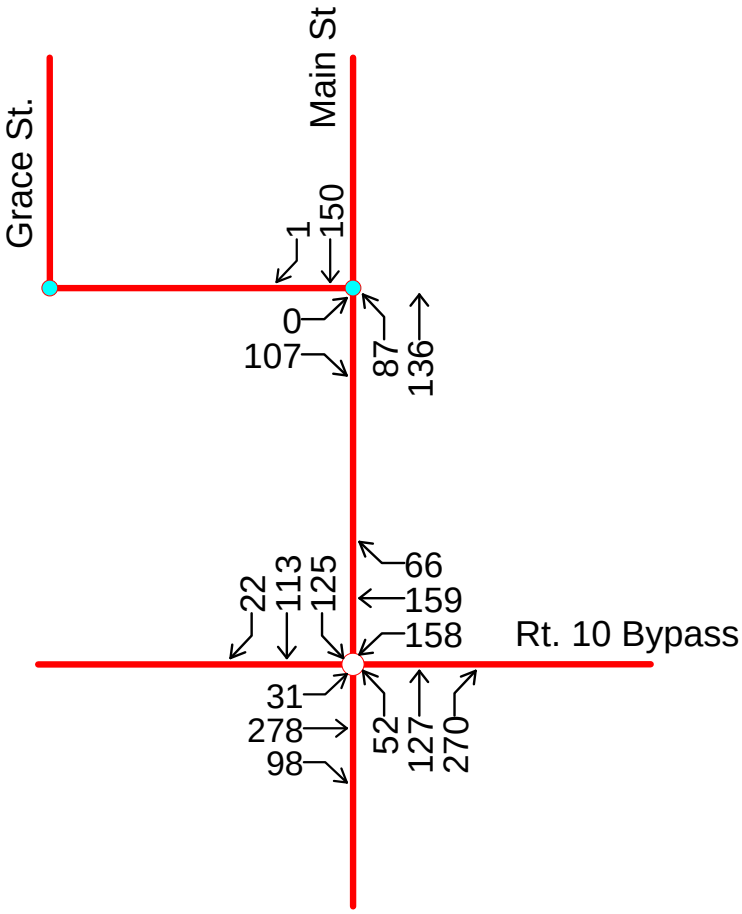

Figure 1 **AM EXISTING**

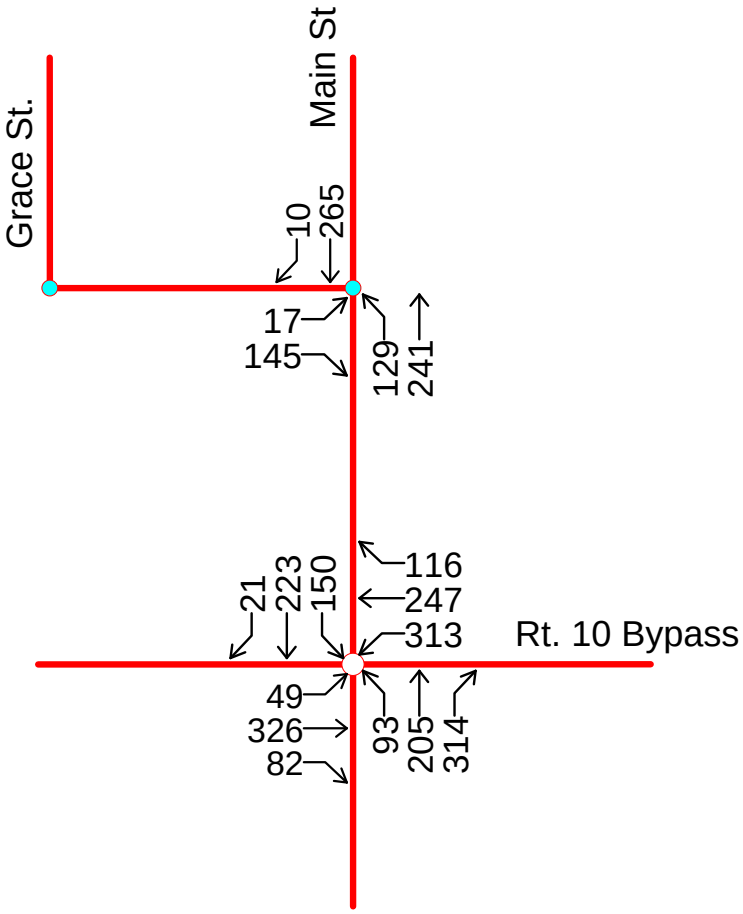
Grace St.
10
17
145
21
223
49
326
82
Main St
265
129
241
150
116
247
313
93
205
314
Rt. 10 Bypass

EXISTING

While these volumes provide a measure of activity on the area road system, it is also important to evaluate how well that system can accommodate these volumes. A comparison of the amount of delay experienced by vehicles is commonly used to determine the levels of service. The delay was analyzed for morning and afternoon peak hours at Main Street and Route 10 Bypass and at Main Street and Grace Street under existing conditions utilizing SYNCHRO, an overlay program for the Highway Capacity Manual (FHWA) software. The results of this analysis indicate the following levels of service and corresponding approach delay in seconds:

EXISTING CONDITIONS

Signalized -	AM	PM
Main/Rt. 10 Bypass	**B** (19.6s)	**C** (28.6s)
NB	C (22.2s)	C (34.6s)
SB	C (21.1s)	C (29.3s)
EB	C (20.4s)	C (31.4s)
WB	B (14.7s)	C (20.8s)
Unsignalized -		
Main/Grace		
NB left	A (7.7s)	A (8.2s)
EB	A (9.7s)	B (12.6s)

As can be seen, the intersections operate acceptably. Consequently, no traffic control improvements are needed under existing conditions.

FUTURE (No Build)

The studied intersections were further analyzed with consideration for growth of traffic volumes on the existing road system at the build-out of the development. Build-out is anticipated to occur within two years, by 2017. To determine the background growth, the Virginia Department of Transportation (VDOT) traffic count data was reviewed for Route 10 Bypass and for Main Street. The historical traffic volumes are as follows:

	Rt. 10 Bypass	**Main Street**
2015	n/a	8,470 vpd
2014	n/a	n/a
2013	19,000 vpd	8,800 vpd
2012	19,000 vpd	8,700 vpd
2011	19,000 vpd	8,900 vpd
2011-2015	0%	-4.8%
Per Annum	0%	-1.2%
growth	0%	0%

As can be seen there has been no growth on Route 10 Bypass and negative growth on Main Street. Consequently, no growth factor will be applied to the existing traffic volumes.

FUTURE (With Cary & Main)

The development plan for Cary & Main subdivision is to construct 152 single family houses. In order to forecast

future traffic conditions upon the completion of Cary & Main, it is necessary to determine the amount of new traffic which will be generated by its development. To accomplish this, trip rates were based upon the Trip Generation: An ITE Informational Report (Institute of Transportation Engineers, 9th Edition, 2012) for Land Use 210 - Single Family Detached Housing. The trip generation is as follows:

			AM		PM	
Land Use	**Size**	**Daily**	**Enter**	**Exit**	**Enter**	**Exit**
Homes	152 sfus	1,544 vpd	29 vph	87 vph	96 vph	57 vph

The following is the distribution that was used for the site based on existing traffic patterns:

From the N on Main:	30%
From the W on Cary:	20%
From the E on Rt. 10 Bypass:	15%
From the W on Rt. 10 Bypass:	5%
From the S on Main (S of Rt 10):	30%
To the N on Main:	30%
To the W on Cary:	15%
To the E on Rt. 10 Bypass:	20%
To the W on Rt. 10 Bypass:	5%
To the S on Main (S of Rt 10):	30%

In addition, the following was assumed:

- 20% of the vehicles to and from the north on Main Street will use the Cary Street access.
- 10% of the vehicles to and from the north on Main Street will use the Grace Street access.

The generated trips were then distributed to and from the site based on these percentages and are shown on Figures 3 and 4. The generated trips from Cary & Main were then combined with the existing traffic to produce the future traffic volumes upon completion of the development.

Since the Main Street access will align with Church Manor Trail, trips were generated for the 50 apartments and the church day care for 75 students that are accessed off of Church Manor Trail to complete the intersection:

			AM		PM	
Land Use	**Size**	**Daily**	**Enter**	**Exit**	**Enter**	**Exit**
Apartments	50 units	426 vpd	6 vph	23 vph	29 vph	16 vph
Day Care	75 children	206 vpd	22 vph	19 vph	19 vph	22 vph

A based on the distributions that were previously used, a 50/50 directional split to/from Main Street was utilized. In addition, it was assumed that 75% of the vehicles to the day care that are to/from the south would utilize the southern driveway to the church.

Also, since Cary Street access will align with Goose Hill Way, trips were generated for the 16 houses that are on this street to complete the intersection:

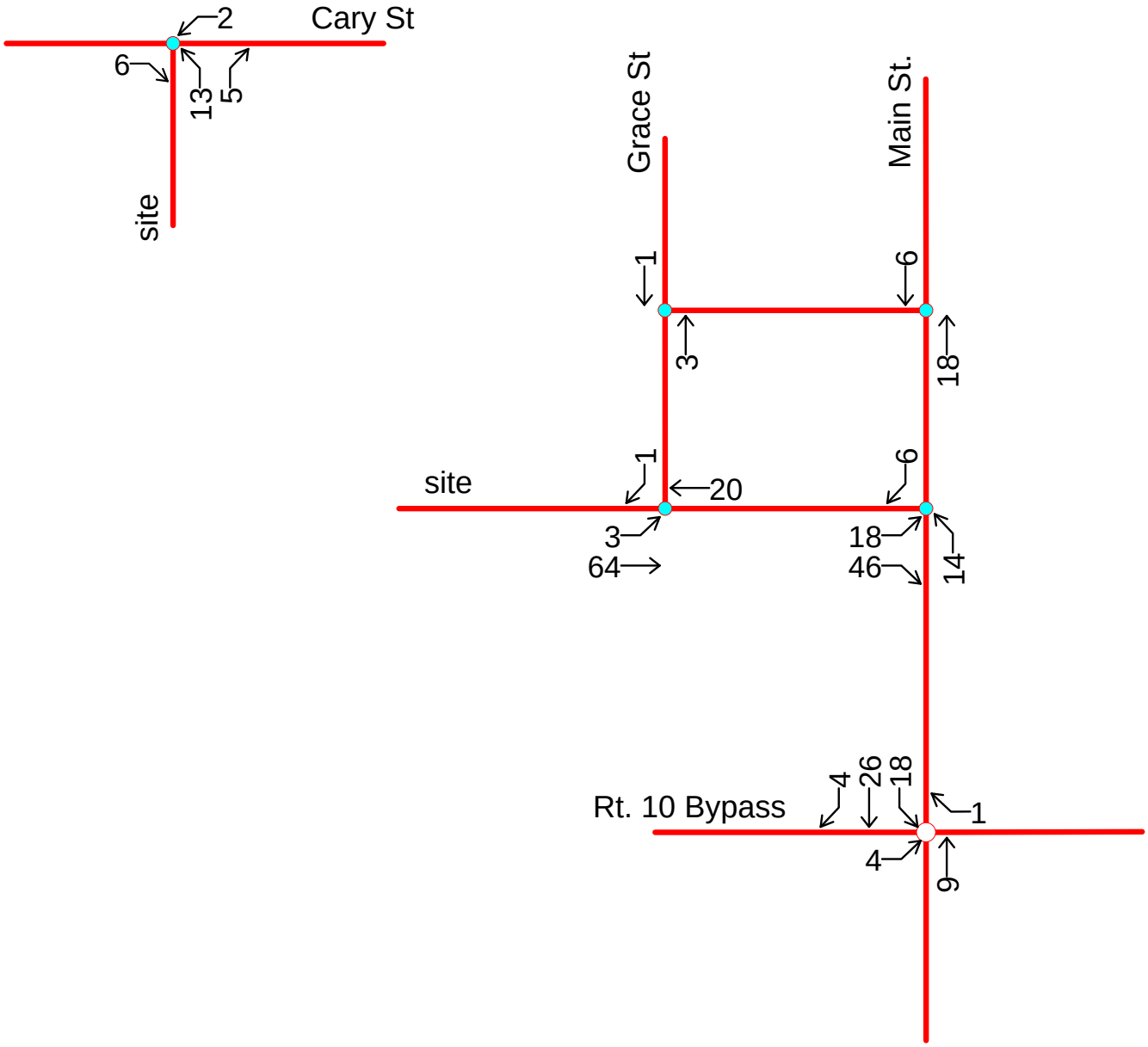

Figure 3 AM DISTRIBUTION

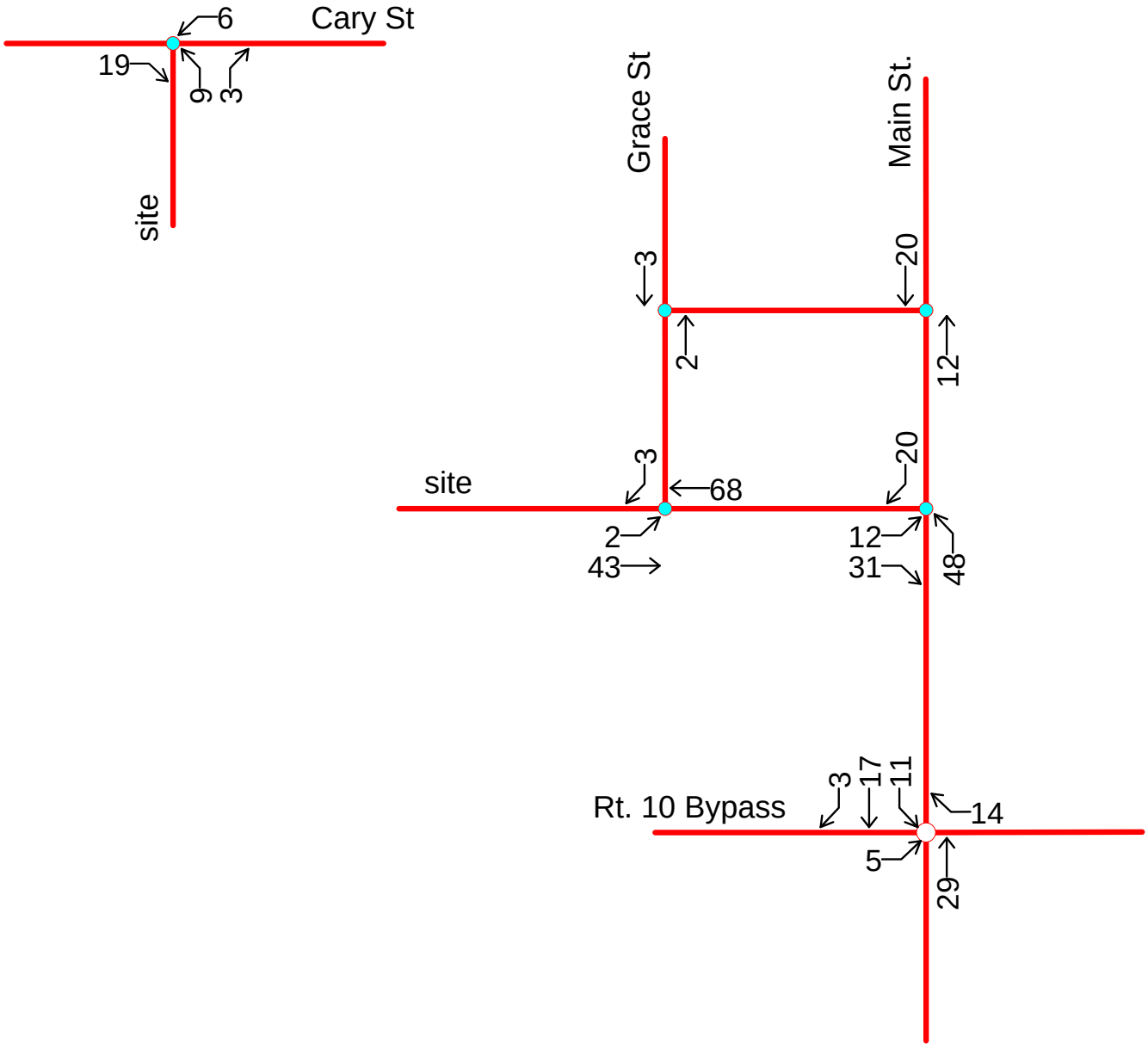

Figure 4 PM DISTRIBUTION

			AM		PM	
Land Use	**Size**	**Daily**	**Enter**	**Exit**	**Enter**	**Exit**
Homes	16 sfus	195 vpd	5 vph	16 vph	13 vph	7 vph

These generated volumes were combined with the Cary & Main traffic as well as the existing traffic volumes and are shown on Figures 5 and 6.

Using the combined volumes, the delay for the studied intersections along Main Street as well as for the newly created unsignalized intersections at Main Street access and the Cary Street access were analyzed for future conditions. The results of this analysis indicate the following levels of service and corresponding approach delay in seconds:

FUTURE (w/Cary & Main)

Signalized -	AM	PM
Main/Rt. 10 Bypass	**B** (17.8s)	**C** (29.4s)
NB	C (21.4s)	C (34.5s)
SB	C (19.8s)	C (30.3s)
EB	B (17.9s)	C (32.4s)
WB	B (12.9s)	C (22.1s)
Unsignalized -		
Main/Grace		
NB left	A (7.7s)	A (8.3s)
EB	A (9.8s)	B (13.0s)

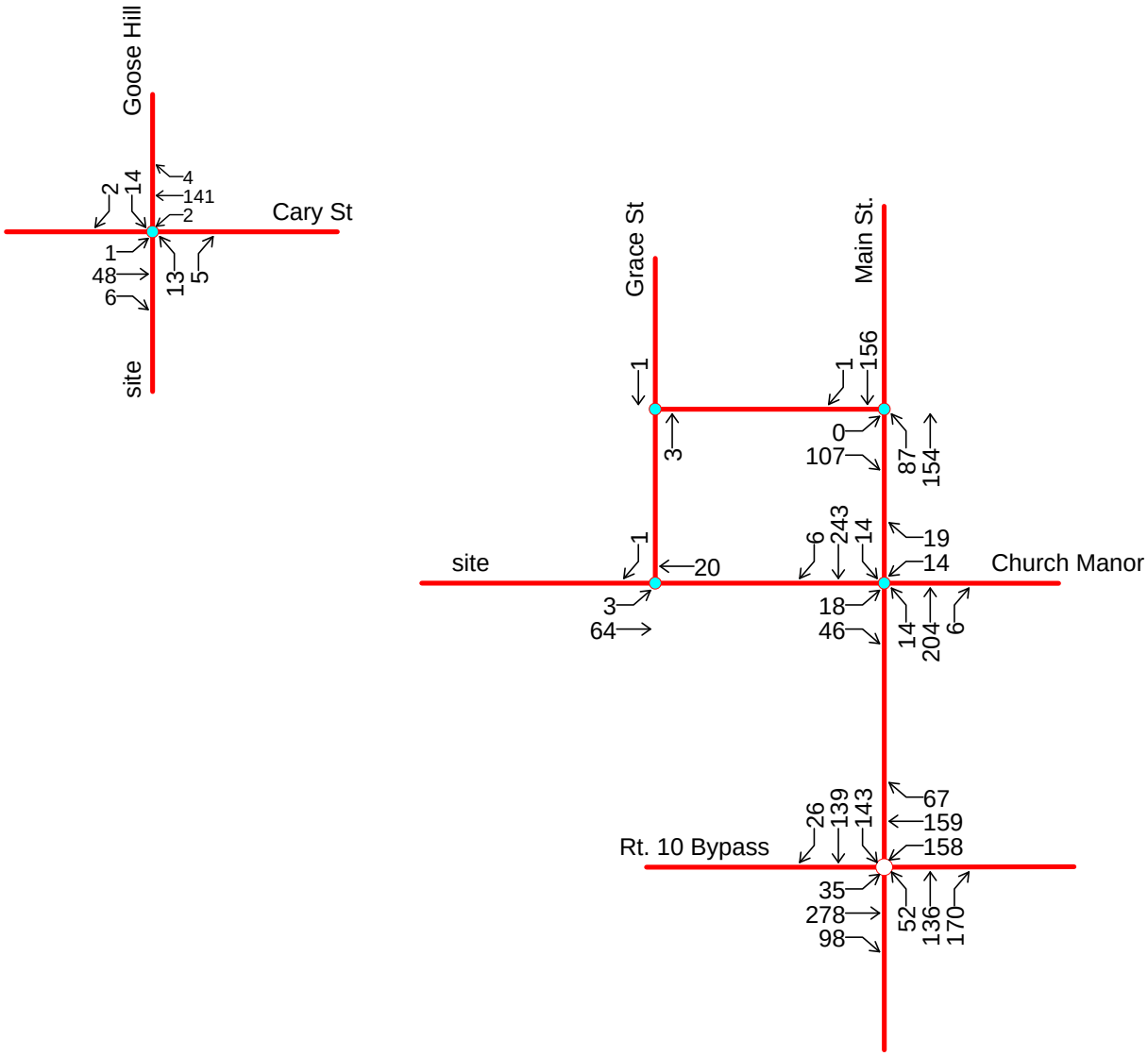

Figure 5 **AM FUTURE (w/Cary & Main Subdivision)**

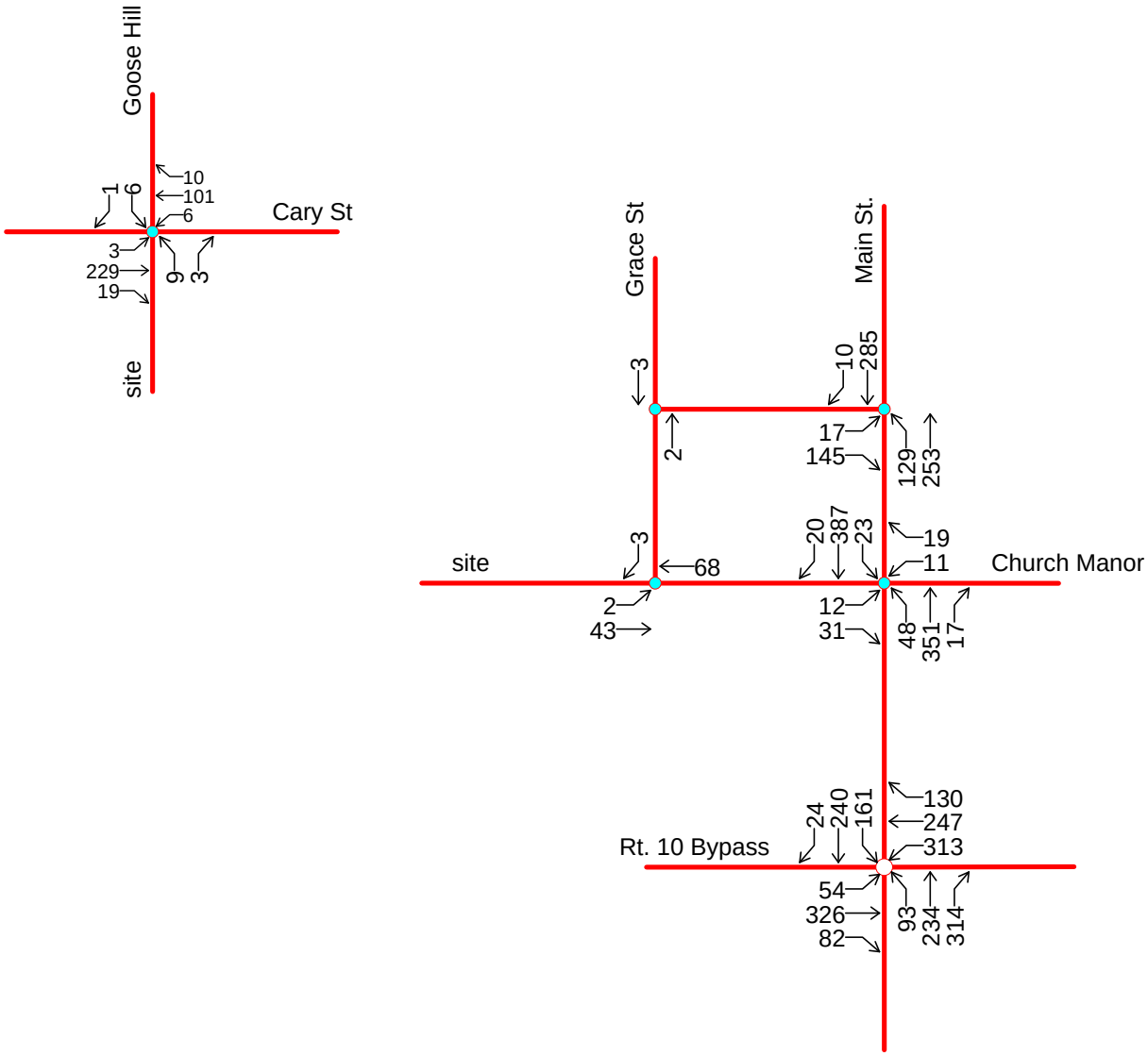

Figure 6 **PM FUTURE (w/Cary & Main Subdivision)**

Main/Cary & Main access

NB left	A (7.8s)	A (8.4s)
SB left	A (7.7s)	A (8.2s)
EB	B (11.5s)	C (15.2s)
WB	B (11.9s)	C (16.0s)

Cary/Cary & Main access

EB left	A (7.5s)	A (7.5s)
WB left	A (7.3s)	A (7.8s)
NB	A (9.6s)	B (11.1s)
SB	A (9.9s)	B (11.2s)

As can be seen, the existing intersections continue to operate acceptably with little change and the newly created intersections at the accesses also function acceptably. Consequently, no traffic control improvements are needed with the development of Cary & Main.

TURN LANE ANALYSIS

While highway capacity analysis gives an indication of traffic flow, review of turn lane requirements at the proposed entrances to Cary & Main is needed to determine what, if any, improvements may be needed in accordance with requirements established by VDOT.

Main Street Access

The need for a right turn lane was reviewed utilizing VDOT Access Management Design Standards, Figure 3-23. A summary of this review is presented below:

Main Street & Site Entrance
Right Turn Review

	SB Rts	Adjd Rts	Appch Vol	Meet Criteria?
AM Peak – Future w/Cary & Main	6 vph	n/a	263 vph	no
PM Peak – Future w/Cary & Main	20 vph	n/a	430 vph	no

Based on VDOT Standards, a southbound right turn lane would not be needed at the intersection of Main Street and site entrance.

The need for a left turn lane was also reviewed utilizing VDOT Access Management Design Standards, Table 3-5 and 3-6. A summary of this review is presented below:

Main Street & Site Entrance
Left Turn Review

	NB Lts	Adv Volume	% Lts	Opp. Volume	Meet Criteria?
AM Peak – Future w/Cary & Main	14 vph	224 vph	6%	263 vph	no
PM Peak – Future w/Cary & Main	48 vph	416 vph	12%	430 vph	100’ turn lane

Based on VDOT Standards, a 100 foot northbound left turn lane would be needed at the intersection of Main Street and site entrance. Currently, a two-way continuous left turn lane already exists on Main Street for a distance over 500 feet to the south of the proposed access. Consequently, the width already exists to create a left turn lane and the pavement markings just need to be restriped specifically as a 100 foot

turn lane with a 100 foot taper for the access. It is noted that there are no existing accesses on the east side of Main Street that this change would impede.

Cary Street Access

The need for a right turn lane was reviewed utilizing VDOT Access Management Design Standards, Figure 3-23. A summary of this review is presented below:

Cary Street & Site Entrance
Right Turn Review

	EB Rts	Adjd Rts	Appch Vol	Meet Criteria?
AM Peak – Future w/Cary & Main	6 vph	n/a	55 vph	no
PM Peak – Future w/Cary & Main	19 vph	n/a	241 vph	no

Based on VDOT Standards, an eastbound right turn lane would not be needed at the intersection of Cary Street and site entrance.

The need for a left turn lane was also reviewed utilizing VDOT Access Management Design Standards, Table 3-4 and 3-5. A summary of this review is presented below:

Cary Street & Site Entrance
Left Turn Review

	WB Lts	Adv Volume	% Lts	Opp. Volume	Meet Criteria?
AM Peak - Future w/Cary & Main	2 vph	147 vph	1%	55 vph	no
PM Peak - Future w/Cary & Main	6 vph	117 vph	5%	241 vph	no

Based on VDOT Standards, a westbound left turn lane would not be needed at the intersection of Cary Street and site entrance.

RECOMMENDATIONS

In conclusion, this report finds that the development of Cary & Main can be approved with the following improvements:

1) Restripe the two-way continuous left turn lane on Main Street at the proposed Cary & Main entrance to create a 100 foot left turn lane with a 100 foot taper.

Cary & Main

Conceptual Master Plan
Smithfield, Virginia
May 1, 2014, rev. December 19, 2014

SITE DATA:

Total Parcel Size: +/-58 a.c.
Current Zoning: C-C Comunity Conservation

Proposed Zoning: DN-R Downtown Neighborhood Residential and 1+/-Ac to be zoned to Downtown for future commercial growth
Max Density Allowed: 5 du/ac
Density Provided: 2.6 du/ac
Min Lot area: 6,000 s.f.
Min Lot Width: 50'
Building Height: 35' Max
Setbacks:
Front: 25'
Side: 10'
Corner: 20'
Rear: 25', 5' for Accessory Use

Open Space Required: 10% (5% active)
Open Space Provided: +/-14 a.c. or 24%
Buffers: 40' buffer req. adjacent to Route 10

Proposed Development:
Lots Provided: 60'x110'
Total Lots Provided: 152 Lots

Location Map

LAND PLANNING SOLUTIONS
5857 HARBOUR VIEW BLVD. STE. 202
SUFFOLK VA. 23435-2657
O 757.935.9014 F 757.935.9015
www.landplanningsolutions.com

O:\Projects\Hearndon\HEA023 - Smithfield 58 acres\Cadd\Prelim\Preliminary Smithfield 58 acres 08.dwg, Plotted By: ergalvin, Plotted: Feb 24, 2015 - 3:55pm

APPENDIX:

TRAFFIC COUNTS
CAPACITY ANALYSES

INTERMODAL ENGINEERING, P.C.

3656 E. Stratford Road
Virginia Beach, VA 23455
intermodalengr@aol.com

Cary & Main TIA

AM Counted: 2/4/2015
PM Counted: 2/3/2015

File Name : Pierce11572 Main & Rt 10
Site Code : 00011572
Start Date : 2/3/2015
Page No : 1

Groups Printed- Unshifted

	Main St Southbound				Rt 10 Bypass Westbound				Main St Northbound				Rt 10 Bypass Eastbound						
Start Time	Left	Thru	Right	Trks	Left	Thru	Right	Trks	Left	Thru	Right	Trks	Left	Thru	Right	Trks	Exclu. Total	Inclu. Total	Int. Total
07:00 AM	37	23	7	0	31	41	15	4	15	28	83	2	12	80	25	2	8	397	405
07:15 AM	38	26	6	1	32	38	10	1	16	20	75	2	8	98	26	1	5	393	398
07:30 AM	26	32	4	0	44	36	21	0	11	35	70	2	6	62	21	1	3	368	371
07:45 AM	24	32	5	0	51	44	20	1	10	44	42	1	5	38	26	0	2	341	343
Total	125	113	22	1	158	159	66	6	52	127	270	7	31	278	98	4	18	1499	1517
08:00 AM	20	28	1	0	35	25	15	1	10	33	46	0	11	32	7	1	2	263	265
08:15 AM	16	42	3	0	52	21	12	1	16	31	24	1	5	28	17	0	2	267	269
08:30 AM	13	56	4	0	50	20	14	0	26	43	81	2	7	54	18	3	5	386	391
08:45 AM	19	41	1	1	59	43	19	2	29	60	124	3	7	60	19	4	10	481	491
Total	68	167	9	1	196	109	60	4	81	167	275	6	30	174	61	8	19	1397	1416
04:00 PM	34	61	13	0	79	68	24	2	13	60	78	0	7	50	35	6	8	522	530
04:15 PM	39	61	9	0	82	66	29	4	12	38	54	1	7	88	37	4	9	522	531
04:30 PM	34	62	5	0	93	70	25	5	29	52	77	2	8	63	18	0	7	536	543
04:45 PM	29	48	5	0	91	57	27	0	9	44	93	2	17	108	19	0	2	547	549
Total	136	232	32	0	345	261	105	11	63	194	302	5	39	309	109	10	26	2127	2153
05:00 PM	55	55	6	1	74	60	25	5	35	56	59	2	9	75	19	1	9	528	537
05:15 PM	32	58	5	0	55	60	39	1	20	53	85	1	15	80	26	2	4	528	532
05:30 PM	41	56	11	0	82	70	41	3	19	49	65	2	14	67	21	0	5	536	541
05:45 PM	30	59	23	0	89	77	21	1	8	45	59	1	15	90	27	1	3	543	546
Total	158	228	45	1	300	267	126	10	82	203	268	6	53	312	93	4	21	2135	2156
Grand Total	487	740	108	3	999	796	357	31	278	691	1115	24	153	1073	361	26	84	7158	7242
Apprch %	36.5	55.4	8.1		46.4	37	16.6		13.3	33.2	53.5		9.6	67.6	22.7				
Total %	6.8	10.3	1.5		14	11.1	5		3.9	9.7	15.6		2.1	15	5		1.2	98.8	

	Main St Southbound				Rt 10 Bypass Westbound				Main St Northbound				Rt 10 Bypass Eastbound				
Start Time	Left	Thru	Right	App. Total	Left	Thru	Right	App. Total	Left	Thru	Right	App. Total	Left	Thru	Right	App. Total	Int. Total
Peak Hour Analysis From 07:00 AM to 11:45 AM - Peak 1 of 1																	
Peak Hour for Entire Intersection Begins at 07:00 AM																	
07:00 AM	37	23	**7**	67	31	41	15	87	15	28	**83**	**126**	**12**	80	25	117	**397**
07:15 AM	**38**	26	6	**70**	32	38	10	80	**16**	20	75	111	8	**98**	**26**	**132**	393
07:30 AM	26	**32**	4	62	44	36	**21**	101	11	35	70	116	6	62	21	89	368
07:45 AM	24	32	5	61	**51**	**44**	20	**115**	10	**44**	42	96	5	38	26	69	341
Total Volume	125	113	22	260	158	159	66	383	52	127	270	449	31	278	98	407	1499
% App. Total	48.1	43.5	8.5		41.3	41.5	17.2		11.6	28.3	60.1		7.6	68.3	24.1		
PHF	.822	.883	.786	.929	.775	.903	.786	.833	.813	.722	.813	.891	.646	.709	.942	.771	.944
Peak Hour Analysis From 12:00 PM to 05:45 PM - Peak 1 of 1																	
Peak Hour for Entire Intersection Begins at 04:30 PM																	
04:30 PM	34	**62**	5	101	**93**	**70**	25	**188**	29	52	77	**158**	8	63	18	89	536
04:45 PM	29	48	5	82	91	57	27	175	9	44	**93**	146	**17**	**108**	19	**144**	**547**
05:00 PM	**55**	55	**6**	**116**	74	60	25	159	**35**	**56**	59	150	9	75	19	103	528
05:15 PM	32	58	5	95	55	60	**39**	154	20	53	85	158	15	80	**26**	121	528
Total Volume	150	223	21	394	313	247	116	676	93	205	314	612	49	326	82	457	2139
% App. Total	38.1	56.6	5.3		46.3	36.5	17.2		15.2	33.5	51.3		10.7	71.3	17.9		
PHF	.682	.899	.875	.849	.841	.882	.744	.899	.664	.915	.844	.968	.721	.755	.788	.793	.978

INTERMODAL ENGINEERING, P.C.

3656 E. Stratford Road
Virginia Beach, VA 23455
intermodalengr@aol.com

Cary & Main TIA

AM Counted: 2/5/2015
PM Counted: 2/3/2015

File Name : Pierce11571 Main & Grace
Site Code : 00011571
Start Date : 2/3/2015
Page No : 1

Groups Printed- Unshifted

	Main St Southbound				Westbound				Main St Northbound				Grace St Eastbound						
Start Time	Left	Thru	Right	Trks	Left	Thru	Right	Trks	Left	Thru	Right	Trks	Left	Thru	Right	Trks	Exclu. Total	Inclu. Total	Int. Total
07:00 AM	0	34	0	0	0	0	0	0	25	36	0	0	0	0	32	0	0	127	127
07:15 AM	0	41	0	0	0	0	0	0	15	23	0	0	0	0	28	0	0	107	107
07:30 AM	0	38	1	0	0	0	0	0	25	38	0	0	0	0	25	0	0	127	127
07:45 AM	0	37	0	0	0	0	0	0	22	39	0	0	0	0	22	0	0	120	120
Total	0	150	1	0	0	0	0	0	87	136	0	0	0	0	107	0	0	481	481
08:00 AM	0	30	0	0	0	0	0	0	25	36	0	0	1	0	23	0	0	115	115
08:15 AM	0	38	2	0	0	0	0	0	18	27	0	0	1	0	26	0	0	112	112
08:30 AM	0	48	2	0	0	0	0	0	19	30	0	0	1	0	25	0	0	125	125
08:45 AM	0	31	0	0	0	0	0	0	23	41	0	0	1	0	17	0	0	113	113
Total	0	147	4	0	0	0	0	0	85	134	0	0	4	0	91	0	0	465	465
04:00 PM	0	71	1	0	0	0	0	0	36	61	0	1	6	0	32	0	1	207	208
04:15 PM	0	63	2	0	0	0	0	0	35	52	0	0	2	0	35	0	0	189	189
04:30 PM	0	60	6	0	0	0	0	0	28	53	0	0	4	0	45	0	0	196	196
04:45 PM	0	71	1	0	0	0	0	0	30	75	0	2	5	0	33	0	2	215	217
Total	0	265	10	0	0	0	0	0	129	241	0	3	17	0	145	0	3	807	810
05:00 PM	0	58	2	0	0	0	0	0	30	45	0	0	1	0	44	0	0	180	180
05:15 PM	0	53	4	0	0	0	0	0	46	75	0	0	2	0	25	0	0	205	205
05:30 PM	0	44	3	0	0	0	0	0	24	53	0	0	1	0	29	0	0	154	154
05:45 PM	0	39	1	0	0	0	0	0	32	62	0	0	2	0	30	0	0	166	166
Total	0	194	10	0	0	0	0	0	132	235	0	0	6	0	128	0	0	705	705
Grand Total	0	756	25	0	0	0	0	0	433	746	0	3	27	0	471	0	3	2458	2461
Apprch %	0	96.8	3.2		0	0	0		36.7	63.3	0		5.4	0	94.6				
Total %	0	30.8	1		0	0	0		17.6	30.3	0		1.1	0	19.2		0.1	99.9	

	Main St Southbound				Westbound				Main St Northbound				Grace St Eastbound				
Start Time	Left	Thru	Right	App. Total	Left	Thru	Right	App. Total	Left	Thru	Right	App. Total	Left	Thru	Right	App. Total	Int. Total
Peak Hour Analysis From 07:00 AM to 11:45 AM - Peak 1 of 1																	
Peak Hour for Entire Intersection Begins at 07:00 AM																	
07:00 AM	0	34	0	34	0	0	0	0	**25**	36	0	61	0	0	**32**	**32**	**127**
07:15 AM	0	**41**	0	**41**	0	0	0	0	15	23	0	38	0	0	28	28	107
07:30 AM	0	38	**1**	39	0	0	0	0	25	38	0	**63**	0	0	25	25	127
07:45 AM	0	37	0	37	0	0	0	0	22	**39**	0	61	0	0	22	22	120
Total Volume	0	150	1	151	0	0	0	0	87	136	0	223	0	0	107	107	481
% App. Total	0	99.3	0.7		0	0	0		39	61	0		0	0	100		
PHF	.000	.915	.250	.921	.000	.000	.000	.000	.870	.872	.000	.885	.000	.000	.836	.836	.947
Peak Hour Analysis From 12:00 PM to 05:45 PM - Peak 1 of 1																	
Peak Hour for Entire Intersection Begins at 04:00 PM																	
04:00 PM	0	**71**	1	**72**	0	0	0	0	**36**	61	0	97	**6**	0	32	38	207
04:15 PM	0	63	2	65	0	0	0	0	35	52	0	87	2	0	35	37	189
04:30 PM	0	60	**6**	66	0	0	0	0	28	53	0	81	4	0	**45**	**49**	196
04:45 PM	0	71	1	72	0	0	0	0	30	**75**	0	**105**	5	0	33	38	**215**
Total Volume	0	265	10	275	0	0	0	0	129	241	0	370	17	0	145	162	807
% App. Total	0	96.4	3.6		0	0	0		34.9	65.1	0		10.5	0	89.5		
PHF	.000	.933	.417	.955	.000	.000	.000	.000	.896	.803	.000	.881	.708	.000	.806	.827	.938

Cary & Main TIA

INTERMODAL ENGINEERING, P.C.

3656 E. Stratford Road
Virginia Beach, VA 23455
757-464-5129
intermodalengr@aol.com

Site Code: 11573

Main St
b/t Grace St & Rt 10 By-pass

Start	02-Feb-15		Tue		Wed		Thu		Fri		Weekday Average		Sat		Sun	
Time	NB	SB	NB	SB	NB	SB	NB	SB	NB	SB	NB	SB	NB	SB	NB	SB
12:00 AM	*	*	22	17	16	22	20	19	*	*	19	19	*	*	*	*
01:00	*	*	11	24	6	26	14	31	*	*	10	27	*	*	*	*
02:00	*	*	3	15	10	16	5	19	*	*	6	17	*	*	*	*
03:00	*	*	7	18	9	10	9	18	*	*	8	15	*	*	*	*
04:00	*	*	31	40	29	43	26	40	*	*	29	41	*	*	*	*
05:00	*	*	99	94	113	103	109	97	*	*	107	98	*	*	*	*
06:00	*	*	151	179	147	172	146	191	*	*	148	181	*	*	*	*
07:00	*	*	233	247	260	271	243	246	*	*	245	255	*	*	*	*
08:00	*	*	**296**	**287**	**295**	**279**	**305**	**262**	*	*	**299**	**276**	*	*	*	*
09:00	*	*	263	217	232	223	278	201	*	*	258	214	*	*	*	*
10:00	*	*	192	202	203	216	210	233	*	*	202	217	*	*	*	*
11:00	*	*	229	260	231	258	243	253	*	*	234	257	*	*	*	*
12:00 PM	*	*	269	282	219	277	243	263	*	*	244	274	*	*	*	*
01:00	*	*	257	267	273	261	240	260	*	*	257	263	*	*	*	*
02:00	*	*	253	266	274	278	231	257	*	*	253	267	*	*	*	*
03:00	*	*	331	328	323	327	339	351	*	*	331	335	*	*	*	*
04:00	*	*	339	**453**	359	**429**	**370**	**429**	*	*	356	**437**	*	*	*	*
05:00	*	*	**417**	448	**406**	425	367	415	*	*	**397**	429	*	*	*	*
06:00	*	*	279	268	260	276	*	*	*	*	270	272	*	*	*	*
07:00	*	*	148	210	155	173	*	*	*	*	152	192	*	*	*	*
08:00	*	*	111	104	132	145	*	*	*	*	122	124	*	*	*	*
09:00	*	*	65	91	74	85	*	*	*	*	70	88	*	*	*	*
10:00	*	*	49	41	49	48	*	*	*	*	49	44	*	*	*	*
11:00	*	*	24	30	40	30	*	*	*	*	32	30	*	*	*	*
Total	0	0	4079	4388	4115	4393	3398	3585	0	0	4098	4372	0	0	0	0
Day	0		8467		8508		6983		0		8470		0		0	
AM Peak	-	-	08:00	08:00	08:00	08:00	08:00	08:00	-	-	08:00	08:00	-	-	-	-
Vol.	-	-	296	287	295	279	305	262	-	-	299	276	-	-	-	-
PM Peak	-	-	17:00	16:00	17:00	16:00	16:00	16:00	-	-	17:00	16:00	-	-	-	-
Vol.	-	-	417	453	406	429	370	429	-	-	397	437	-	-	-	-

Comb. Total	0	8467	8508	6983	0	8470	0	0

ADT ADT 8,365 AADT 8,365

Cary & Main TIA

INTERMODAL ENGINEERING, P.C.

3656 E. Stratford Road
Virginia Beach, VA 23455
757-464-5129
intermodalengr@aol.com

Site Code: 11574

Grace St.
b/t Cary St & Main St

Start	02-Feb-15		Tue		Wed		Thu		Fri		Weekday Average		Sat		Sun	
Time	To Cary	To Main	To Cary	To Main	To Cary	To Main	To Cary	To Main	To Cary	To Main	To Cary	To Main	To Cary	To Main	To Cary	To Main
12:00 AM	*	*	8	8	6	9	9	8	*	*	8	8	*	*	*	*
01:00	*	*	2	12	3	10	7	17	*	*	4	13	*	*	*	*
02:00	*	*	2	6	4	8	0	7	*	*	2	7	*	*	*	*
03:00	*	*	2	8	3	3	2	7	*	*	2	6	*	*	*	*
04:00	*	*	14	25	16	28	14	27	*	*	15	27	*	*	*	*
05:00	*	*	51	51	62	54	69	46	*	*	61	50	*	*	*	*
06:00	*	*	78	83	79	81	79	92	*	*	79	85	*	*	*	*
07:00	*	*	82	117	**98**	**133**	**96**	115	*	*	92	**122**	*	*	*	*
08:00	*	*	**105**	116	98	110	88	94	*	*	**97**	107	*	*	*	*
09:00	*	*	85	86	88	109	85	81	*	*	86	92	*	*	*	*
10:00	*	*	60	88	56	103	63	86	*	*	60	92	*	*	*	*
11:00	*	*	68	**119**	78	123	67	**120**	*	*	71	121	*	*	*	*
12:00 PM	*	*	78	123	70	109	78	118	*	*	75	117	*	*	*	*
01:00	*	*	75	105	84	116	81	108	*	*	80	110	*	*	*	*
02:00	*	*	98	109	90	93	75	102	*	*	88	101	*	*	*	*
03:00	*	*	144	115	123	125	132	132	*	*	133	124	*	*	*	*
04:00	*	*	126	**190**	139	172	147	177	*	*	137	**180**	*	*	*	*
05:00	*	*	**165**	168	**170**	**181**	**166**	**189**	*	*	**167**	179	*	*	*	*
06:00	*	*	147	105	112	114	*	*	*	*	130	110	*	*	*	*
07:00	*	*	66	101	68	110	*	*	*	*	67	106	*	*	*	*
08:00	*	*	44	42	56	96	*	*	*	*	50	69	*	*	*	*
09:00	*	*	34	28	30	38	*	*	*	*	32	33	*	*	*	*
10:00	*	*	19	15	20	25	*	*	*	*	20	20	*	*	*	*
11:00	*	*	7	10	15	14	*	*	*	*	11	12	*	*	*	*
Total	0	0	1560	1830	1568	1964	1258	1526	0	0	1567	1891	0	0	0	0
Day	0		3390		3532		2784		0		3458		0		0	
AM Peak	-	-	08:00	11:00	07:00	07:00	07:00	11:00	-	-	08:00	07:00	-	-	-	-
Vol.	-	-	105	119	98	133	96	120	-	-	97	122	-	-	-	-
PM Peak	-	-	17:00	16:00	17:00	17:00	17:00	17:00	-	-	17:00	16:00	-	-	-	-
Vol.	-	-	165	190	170	181	166	189	-	-	167	180	-	-	-	-

Comb. Total	0	3390	3532	2784	0	3458	0	0

ADT ADT 3,412 AADT 3,412

Cary & Main TIA

INTERMODAL ENGINEERING, P.C.

3656 E. Stratford Road
Virginia Beach, VA 23455
757-464-5129
intermodalengr@aol.com

Site Code: 11575

Cary St
W of Grace St

Start	02-Feb-15		Tue		Wed		Thu		Fri		Weekday Average		Sat		Sun	
Time	EB	WB	EB	WB	EB	WB	EB	WB	EB	WB	EB	WB	EB	WB	EB	WB
12:00 AM	*	*	11	2	6	0	12	2	*	*	10	1	*	*	*	*
01:00	*	*	2	2	6	0	6	2	*	*	5	1	*	*	*	*
02:00	*	*	4	1	3	1	3	3	*	*	3	2	*	*	*	*
03:00	*	*	2	5	4	3	3	4	*	*	3	4	*	*	*	*
04:00	*	*	4	41	3	44	4	38	*	*	4	41	*	*	*	*
05:00	*	*	17	67	27	62	22	64	*	*	22	64	*	*	*	*
06:00	*	*	23	103	33	115	27	111	*	*	28	110	*	*	*	*
07:00	*	*	42	**138**	55	**143**	47	**142**	*	*	48	**141**	*	*	*	*
08:00	*	*	60	121	64	106	48	112	*	*	57	113	*	*	*	*
09:00	*	*	68	59	**78**	93	76	70	*	*	**74**	74	*	*	*	*
10:00	*	*	54	82	55	74	55	86	*	*	55	81	*	*	*	*
11:00	*	*	**69**	82	69	98	**80**	77	*	*	73	86	*	*	*	*
12:00 PM	*	*	80	83	86	65	78	77	*	*	81	75	*	*	*	*
01:00	*	*	72	**89**	75	72	82	67	*	*	76	76	*	*	*	*
02:00	*	*	97	78	89	64	74	67	*	*	87	70	*	*	*	*
03:00	*	*	127	58	123	69	130	74	*	*	127	67	*	*	*	*
04:00	*	*	151	71	175	81	167	69	*	*	164	74	*	*	*	*
05:00	*	*	**227**	89	**227**	**105**	**233**	**110**	*	*	**229**	**101**	*	*	*	*
06:00	*	*	190	85	144	76	*	*	*	*	167	80	*	*	*	*
07:00	*	*	87	89	95	56	*	*	*	*	91	72	*	*	*	*
08:00	*	*	67	41	73	43	*	*	*	*	70	42	*	*	*	*
09:00	*	*	41	15	37	21	*	*	*	*	39	18	*	*	*	*
10:00	*	*	16	15	19	13	*	*	*	*	18	14	*	*	*	*
11:00	*	*	12	8	18	9	*	*	*	*	15	8	*	*	*	*
Total	0	0	1523	1424	1564	1413	1147	1175	0	0	1546	1415	0	0	0	0
Day	0		2947		2977		2322		0		2961		0		0	
AM Peak	-	-	11:00	07:00	09:00	07:00	11:00	07:00	-	-	09:00	07:00	-	-	-	-
Vol.	-	-	69	138	78	143	80	142	-	-	74	141	-	-	-	-
PM Peak	-	-	17:00	13:00	17:00	17:00	17:00	17:00	-	-	17:00	17:00	-	-	-	-
Vol.	-	-	227	89	227	105	233	110	-	-	229	101	-	-	-	-

Comb. Total	0	2947	2977	2322	0	2961	0	0

ADT ADT 2,908 AADT 2,908

HCM 2010 Signalized Intersection Summary
1: Rt. 10 Bypass & Main St

2/24/2015

Movement	EBL	EBT	EBR	WBL	WBT	WBR	NBL	NBT	NBR	SBL	SBT	SBR
Lane Configurations												
Volume (veh/h)	31	278	98	158	159	66	52	127	270	125	113	22
Number	7	4	14	3	8	18	5	2	12	1	6	16
Initial Q (Qb), veh	0	0	0	0	0	0	0	0	0	0	0	0
Ped-Bike Adj(A_pbT)	1.00		1.00	1.00		1.00	1.00		1.00	1.00		1.00
Parking Bus, Adj	1.00	1.00	1.00	1.00	1.00	1.00	1.00	1.00	1.00	1.00	1.00	1.00
Adj Sat Flow, veh/h/ln	1863	1863	1863	1863	1863	1863	1863	1863	1863	1863	1863	1863
Adj Flow Rate, veh/h	34	302	107	172	173	72	57	138	293	136	123	24
Adj No. of Lanes	1	1	1	1	1	1	1	1	1	1	1	1
Peak Hour Factor	0.92	0.92	0.92	0.92	0.92	0.92	0.92	0.92	0.92	0.92	0.92	0.92
Percent Heavy Veh, %	2	2	2	2	2	2	2	2	2	2	2	2
Cap, veh/h	475	449	381	418	575	488	104	470	399	207	578	491
Arrive On Green	0.05	0.24	0.24	0.11	0.31	0.31	0.06	0.25	0.25	0.12	0.31	0.31
Sat Flow, veh/h	1774	1863	1583	1774	1863	1583	1774	1863	1583	1774	1863	1583
Grp Volume(v), veh/h	34	302	107	172	173	72	57	138	293	136	123	24
Grp Sat Flow(s),veh/h/ln	1774	1863	1583	1774	1863	1583	1774	1863	1583	1774	1863	1583
Q Serve(g_s), s	0.8	8.5	3.2	3.8	4.1	1.9	1.8	3.5	9.8	4.2	2.8	0.6
Cycle Q Clear(g_c), s	0.8	8.5	3.2	3.8	4.1	1.9	1.8	3.5	9.8	4.2	2.8	0.6
Prop In Lane	1.00		1.00	1.00		1.00	1.00		1.00	1.00		1.00
Lane Grp Cap(c), veh/h	475	449	381	418	575	488	104	470	399	207	578	491
V/C Ratio(X)	0.07	0.67	0.28	0.41	0.30	0.15	0.55	0.29	0.73	0.66	0.21	0.05
Avail Cap(c_a), veh/h	546	868	738	522	1029	875	214	707	601	459	965	820
HCM Platoon Ratio	1.00	1.00	1.00	1.00	1.00	1.00	1.00	1.00	1.00	1.00	1.00	1.00
Upstream Filter(I)	1.00	1.00	1.00	1.00	1.00	1.00	1.00	1.00	1.00	1.00	1.00	1.00
Uniform Delay (d), s/veh	15.0	19.9	17.9	13.2	15.3	14.5	26.5	17.5	19.9	24.5	14.8	14.0
Incr Delay (d2), s/veh	0.1	1.8	0.4	0.6	0.3	0.1	4.4	0.3	2.6	3.5	0.2	0.0
Initial Q Delay(d3),s/veh	0.0	0.0	0.0	0.0	0.0	0.0	0.0	0.0	0.0	0.0	0.0	0.0
%ile BackOfQ(50%),veh/ln	0.4	4.6	1.4	1.9	2.2	0.8	1.0	1.8	4.6	2.3	1.5	0.3
LnGrp Delay(d),s/veh	15.1	21.7	18.3	13.8	15.6	14.6	30.9	17.8	22.5	28.0	14.9	14.0
LnGrp LOS	B	C	B	B	B	B	C	B	C	C	B	B
Approach Vol, veh/h		443			417			488			283	
Approach Delay, s/veh		20.4			14.7			22.2			21.1	
Approach LOS		C			B			C			C	

Timer	1	2	3	4	5	6	7	8
Assigned Phs	1	2	3	4	5	6	7	8
Phs Duration (G+Y+Rc), s	10.8	18.6	10.6	18.0	7.4	22.0	6.7	21.9
Change Period (Y+Rc), s	5.0	5.0	5.0	5.0	5.0	5.0	5.0	5.0
Max Green Setting (Gmax), s	14.0	21.0	9.0	26.0	6.0	29.0	4.0	31.0
Max Q Clear Time (g_c+I1), s	6.2	11.8	5.8	10.5	3.8	4.8	2.8	6.1
Green Ext Time (p_c), s	0.2	1.8	0.2	2.4	0.0	2.5	0.0	2.7

Intersection Summary	
HCM 2010 Ctrl Delay	19.6
HCM 2010 LOS	B

Phase Number	1	2	3	4	5	6	7	8
Movement	SBL	NBT	WBL	EBTL	NBL	SBT	EBL	WBTL
Lead/Lag	Lead	Lag	Lead	Lag	Lead	Lag	Lead	Lag
Lead-Lag Optimize	Yes	Yes	Yes	Yes	Yes	Yes	Yes	Yes
Recall Mode	None	Min	None	None	None	Min	None	None
Maximum Split (s)	19	26	14	31	11	34	9	36
Maximum Split (%)	21.1%	28.9%	15.6%	34.4%	12.2%	37.8%	10.0%	40.0%
Minimum Split (s)	9	15	9	15	9	15	9	15
Yellow Time (s)	3.5	3.5	3.5	3.5	3.5	3.5	3.5	3.5
All-Red Time (s)	1.5	1.5	1.5	1.5	1.5	1.5	1.5	1.5
Minimum Initial (s)	4	4	4	4	4	4	4	4
Vehicle Extension (s)	3	3	3	3	3	3	3	3
Minimum Gap (s)	3	3	3	3	3	3	3	3
Time Before Reduce (s)	0	0	0	0	0	0	0	0
Time To Reduce (s)	0	0	0	0	0	0	0	0
Walk Time (s)		1		1		1		1
Flash Dont Walk (s)		1		1		1		1
Dual Entry	No	Yes	No	Yes	No	Yes	No	Yes
Inhibit Max	Yes	Yes	Yes	Yes	Yes	Yes	Yes	Yes
Start Time (s)	0	19	45	59	0	11	45	54
End Time (s)	19	45	59	0	11	45	54	0
Yield/Force Off (s)	14	40	54	85	6	40	49	85
Yield/Force Off 170(s)	14	40	54	84	6	40	49	84
Local Start Time (s)	71	0	26	40	71	82	26	35
Local Yield (s)	85	21	35	66	77	21	30	66
Local Yield 170(s)	85	21	35	65	77	21	30	65

Intersection Summary	
Cycle Length	90
Control Type	Actuated-Uncoordinated
Natural Cycle	55

Splits and Phases: 1: Rt. 10 Bypass & Main St

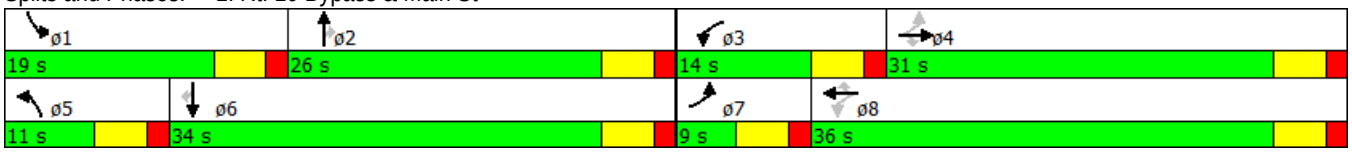

Intersection	
Int Delay, s/veh	3.5

Movement	EBL	EBR	NBL	NBT	SBT	SBR
Vol, veh/h	0	107	87	136	150	1
Conflicting Peds, #/hr	0	0	0	0	0	0
Sign Control	Stop	Stop	Free	Free	Free	Free
RT Channelized	-	None	-	None	-	None
Storage Length	0	-	0	-	-	-
Veh in Median Storage, #	0	-	-	0	0	-
Grade, %	0	-	-	0	0	-
Peak Hour Factor	92	92	92	92	92	92
Heavy Vehicles, %	2	2	2	2	2	2
Mvmt Flow	0	116	95	148	163	1

Major/Minor	Minor2		Major1		Major2	
Conflicting Flow All	501	164	164	0	-	0
Stage 1	164	-	-	-	-	-
Stage 2	337	-	-	-	-	-
Critical Hdwy	6.42	6.22	4.12	-	-	-
Critical Hdwy Stg 1	5.42	-	-	-	-	-
Critical Hdwy Stg 2	5.42	-	-	-	-	-
Follow-up Hdwy	3.518	3.318	2.218	-	-	-
Pot Cap-1 Maneuver	530	881	1414	-	-	-
Stage 1	865	-	-	-	-	-
Stage 2	723	-	-	-	-	-
Platoon blocked, %				-	-	-
Mov Cap-1 Maneuver	494	881	1414	-	-	-
Mov Cap-2 Maneuver	494	-	-	-	-	-
Stage 1	865	-	-	-	-	-
Stage 2	674	-	-	-	-	-

Approach	EB	NB	SB
HCM Control Delay, s	9.7	3	0
HCM LOS	A		

Minor Lane/Major Mvmt	NBL	NBT	EBLn1	SBT	SBR
Capacity (veh/h)	1414	-	881	-	-
HCM Lane V/C Ratio	0.067	-	0.132	-	-
HCM Control Delay (s)	7.7	-	9.7	-	-
HCM Lane LOS	A	-	A	-	-
HCM 95th %tile Q(veh)	0.2	-	0.5	-	-

HCM 2010 Signalized Intersection Summary
1: Rt. 10 Bypass & Main St

2/24/2015

Movement	EBL	EBT	EBR	WBL	WBT	WBR	NBL	NBT	NBR	SBL	SBT	SBR
Lane Configurations												
Volume (veh/h)	49	326	82	313	247	116	93	205	314	150	223	21
Number	7	4	14	3	8	18	5	2	12	1	6	16
Initial Q (Qb), veh	0	0	0	0	0	0	0	0	0	0	0	0
Ped-Bike Adj(A_pbT)	1.00		1.00	1.00		1.00	1.00		1.00	1.00		1.00
Parking Bus, Adj	1.00	1.00	1.00	1.00	1.00	1.00	1.00	1.00	1.00	1.00	1.00	1.00
Adj Sat Flow, veh/h/ln	1863	1863	1863	1863	1863	1863	1863	1863	1863	1863	1863	1863
Adj Flow Rate, veh/h	53	354	89	340	268	126	101	223	341	163	242	23
Adj No. of Lanes	1	1	1	1	1	1	1	1	1	1	1	1
Peak Hour Factor	0.92	0.92	0.92	0.92	0.92	0.92	0.92	0.92	0.92	0.92	0.92	0.92
Percent Heavy Veh, %	2	2	2	2	2	2	2	2	2	2	2	2
Cap, veh/h	412	448	381	457	683	580	151	483	411	222	557	474
Arrive On Green	0.05	0.24	0.24	0.17	0.37	0.37	0.09	0.26	0.26	0.13	0.30	0.30
Sat Flow, veh/h	1774	1863	1583	1774	1863	1583	1774	1863	1583	1774	1863	1583
Grp Volume(v), veh/h	53	354	89	340	268	126	101	223	341	163	242	23
Grp Sat Flow(s),veh/h/ln	1774	1863	1583	1774	1863	1583	1774	1863	1583	1774	1863	1583
Q Serve(g_s), s	1.7	14.1	3.6	10.5	8.4	4.3	4.4	8.0	16.1	7.0	8.3	0.8
Cycle Q Clear(g_c), s	1.7	14.1	3.6	10.5	8.4	4.3	4.4	8.0	16.1	7.0	8.3	0.8
Prop In Lane	1.00		1.00	1.00		1.00	1.00		1.00	1.00		1.00
Lane Grp Cap(c), veh/h	412	448	381	457	683	580	151	483	411	222	557	474
V/C Ratio(X)	0.13	0.79	0.23	0.74	0.39	0.22	0.67	0.46	0.83	0.73	0.43	0.05
Avail Cap(c_a), veh/h	440	540	459	485	775	659	224	540	459	291	611	519
HCM Platoon Ratio	1.00	1.00	1.00	1.00	1.00	1.00	1.00	1.00	1.00	1.00	1.00	1.00
Upstream Filter(I)	1.00	1.00	1.00	1.00	1.00	1.00	1.00	1.00	1.00	1.00	1.00	1.00
Uniform Delay (d), s/veh	20.7	28.2	24.2	17.8	18.6	17.3	35.2	24.7	27.7	33.4	22.4	19.8
Incr Delay (d2), s/veh	0.1	6.5	0.3	5.8	0.4	0.2	5.0	0.7	11.2	6.6	0.5	0.0
Initial Q Delay(d3),s/veh	0.0	0.0	0.0	0.0	0.0	0.0	0.0	0.0	0.0	0.0	0.0	0.0
%ile BackOfQ(50%),veh/ln	0.9	8.1	1.6	5.7	4.4	1.9	2.3	4.2	8.3	3.8	4.3	0.4
LnGrp Delay(d),s/veh	20.9	34.8	24.6	23.6	19.0	17.5	40.2	25.4	38.9	40.0	22.9	19.8
LnGrp LOS	C	C	C	C	B	B	D	C	D	D	C	B
Approach Vol, veh/h		496			734			665			428	
Approach Delay, s/veh		31.4			20.8			34.6			29.3	
Approach LOS		C			C			C			C	

Timer	1	2	3	4	5	6	7	8
Assigned Phs	1	2	3	4	5	6	7	8
Phs Duration (G+Y+Rc), s	13.9	24.6	17.8	23.1	10.7	27.7	7.8	33.1
Change Period (Y+Rc), s	5.0	5.0	5.0	5.0	5.0	5.0	5.0	5.0
Max Green Setting (Gmax), s	12.0	22.0	14.0	22.0	9.0	25.0	4.0	32.0
Max Q Clear Time (g_c+I1), s	9.0	18.1	12.5	16.1	6.4	10.3	3.7	10.4
Green Ext Time (p_c), s	0.1	1.4	0.2	1.9	0.1	3.2	0.0	3.5

Intersection Summary	
HCM 2010 Ctrl Delay	28.6
HCM 2010 LOS	C

Phase Number	1	2	3	4	5	6	7	8
Movement	SBL	NBT	WBL	EBTL	NBL	SBT	EBL	WBTL
Lead/Lag	Lead	Lag	Lead	Lag	Lead	Lag	Lead	Lag
Lead-Lag Optimize	Yes	Yes	Yes	Yes	Yes	Yes	Yes	Yes
Recall Mode	None	Min	None	None	None	Min	None	None
Maximum Split (s)	17	27	19	27	14	30	9	37
Maximum Split (%)	18.9%	30.0%	21.1%	30.0%	15.6%	33.3%	10.0%	41.1%
Minimum Split (s)	9	15	9	15	9	15	9	15
Yellow Time (s)	3.5	3.5	3.5	3.5	3.5	3.5	3.5	3.5
All-Red Time (s)	1.5	1.5	1.5	1.5	1.5	1.5	1.5	1.5
Minimum Initial (s)	4	4	4	4	4	4	4	4
Vehicle Extension (s)	3	3	3	3	3	3	3	3
Minimum Gap (s)	3	3	3	3	3	3	3	3
Time Before Reduce (s)	0	0	0	0	0	0	0	0
Time To Reduce (s)	0	0	0	0	0	0	0	0
Walk Time (s)		1		1		1		1
Flash Dont Walk (s)		1		1		1		1
Dual Entry	No	Yes	No	Yes	No	Yes	No	Yes
Inhibit Max	Yes	Yes	Yes	Yes	Yes	Yes	Yes	Yes
Start Time (s)	0	17	44	63	0	14	44	53
End Time (s)	17	44	63	0	14	44	53	0
Yield/Force Off (s)	12	39	58	85	9	39	48	85
Yield/Force Off 170(s)	12	39	58	84	9	39	48	84
Local Start Time (s)	73	0	27	46	73	87	27	36
Local Yield (s)	85	22	41	68	82	22	31	68
Local Yield 170(s)	85	22	41	67	82	22	31	67

Intersection Summary	
Cycle Length	90
Control Type	Actuated-Uncoordinated
Natural Cycle	60

Splits and Phases: 1: Rt. 10 Bypass & Main St

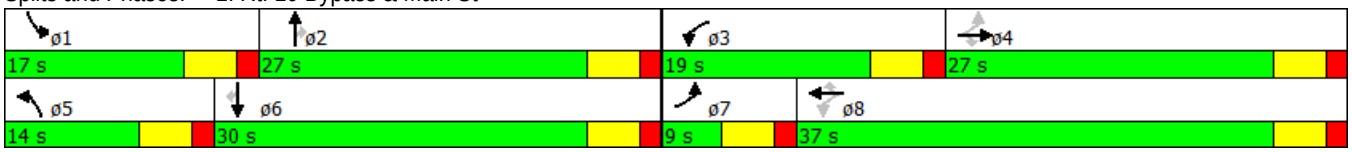

Intersection	
Int Delay, s/veh	3.9

Movement	EBL	EBR	NBL	NBT	SBT	SBR
Vol, veh/h	17	145	129	241	265	10
Conflicting Peds, #/hr	0	0	0	0	0	0
Sign Control	Stop	Stop	Free	Free	Free	Free
RT Channelized	-	None	-	None	-	None
Storage Length	0	-	0	-	-	-
Veh in Median Storage, #	0	-	-	0	0	-
Grade, %	0	-	-	0	0	-
Peak Hour Factor	92	92	92	92	92	92
Heavy Vehicles, %	2	2	2	2	2	2
Mvmt Flow	18	158	140	262	288	11

Major/Minor	Minor2		Major1		Major2	
Conflicting Flow All	835	293	299	0	-	0
Stage 1	293	-	-	-	-	-
Stage 2	542	-	-	-	-	-
Critical Hdwy	6.42	6.22	4.12	-	-	-
Critical Hdwy Stg 1	5.42	-	-	-	-	-
Critical Hdwy Stg 2	5.42	-	-	-	-	-
Follow-up Hdwy	3.518	3.318	2.218	-	-	-
Pot Cap-1 Maneuver	338	746	1262	-	-	-
Stage 1	757	-	-	-	-	-
Stage 2	583	-	-	-	-	-
Platoon blocked, %				-	-	-
Mov Cap-1 Maneuver	301	746	1262	-	-	-
Mov Cap-2 Maneuver	301	-	-	-	-	-
Stage 1	757	-	-	-	-	-
Stage 2	518	-	-	-	-	-

Approach	EB	NB	SB
HCM Control Delay, s	12.6	2.9	0
HCM LOS	B		

Minor Lane/Major Mvmt	NBL	NBT	EBLn1	SBT	SBR
Capacity (veh/h)	1262	-	646	-	-
HCM Lane V/C Ratio	0.111	-	0.273	-	-
HCM Control Delay (s)	8.2	-	12.6	-	-
HCM Lane LOS	A	-	B	-	-
HCM 95th %tile Q(veh)	0.4	-	1.1	-	-

Movement	EBL	EBT	EBR	WBL	WBT	WBR	NBL	NBT	NBR	SBL	SBT	SBR
Lane Configurations												
Volume (veh/h)	35	278	98	158	159	67	52	136	170	143	139	26
Number	7	4	14	3	8	18	5	2	12	1	6	16
Initial Q (Qb), veh	0	0	0	0	0	0	0	0	0	0	0	0
Ped-Bike Adj(A_pbT)	1.00		1.00	1.00		1.00	1.00		1.00	1.00		1.00
Parking Bus, Adj	1.00	1.00	1.00	1.00	1.00	1.00	1.00	1.00	1.00	1.00	1.00	1.00
Adj Sat Flow, veh/h/ln	1863	1863	1863	1863	1863	1863	1863	1863	1863	1863	1863	1863
Adj Flow Rate, veh/h	38	302	107	172	173	73	57	148	185	155	151	28
Adj No. of Lanes	1	1	1	1	1	1	1	1	1	1	1	1
Peak Hour Factor	0.92	0.92	0.92	0.92	0.92	0.92	0.92	0.92	0.92	0.92	0.92	0.92
Percent Heavy Veh, %	2	2	2	2	2	2	2	2	2	2	2	2
Cap, veh/h	508	467	397	449	590	502	110	359	305	237	492	418
Arrive On Green	0.05	0.25	0.25	0.12	0.32	0.32	0.06	0.19	0.19	0.13	0.26	0.26
Sat Flow, veh/h	1774	1863	1583	1774	1863	1583	1774	1863	1583	1774	1863	1583
Grp Volume(v), veh/h	38	302	107	172	173	73	57	148	185	155	151	28
Grp Sat Flow(s),veh/h/ln	1774	1863	1583	1774	1863	1583	1774	1863	1583	1774	1863	1583
Q Serve(g_s), s	0.8	7.6	2.8	3.4	3.7	1.7	1.6	3.7	5.6	4.3	3.4	0.7
Cycle Q Clear(g_c), s	0.8	7.6	2.8	3.4	3.7	1.7	1.6	3.7	5.6	4.3	3.4	0.7
Prop In Lane	1.00		1.00	1.00		1.00	1.00		1.00	1.00		1.00
Lane Grp Cap(c), veh/h	508	467	397	449	590	502	110	359	305	237	492	418
V/C Ratio(X)	0.07	0.65	0.27	0.38	0.29	0.15	0.52	0.41	0.61	0.65	0.31	0.07
Avail Cap(c_a), veh/h	585	995	846	612	1208	1027	237	640	544	575	995	846
HCM Platoon Ratio	1.00	1.00	1.00	1.00	1.00	1.00	1.00	1.00	1.00	1.00	1.00	1.00
Upstream Filter(I)	1.00	1.00	1.00	1.00	1.00	1.00	1.00	1.00	1.00	1.00	1.00	1.00
Uniform Delay (d), s/veh	13.0	17.6	15.8	11.5	13.5	12.8	23.8	18.5	19.3	21.6	15.4	14.4
Incr Delay (d2), s/veh	0.1	1.5	0.4	0.5	0.3	0.1	3.7	0.8	1.9	3.1	0.3	0.1
Initial Q Delay(d3),s/veh	0.0	0.0	0.0	0.0	0.0	0.0	0.0	0.0	0.0	0.0	0.0	0.0
%ile BackOfQ(50%),veh/ln	0.4	4.1	1.3	1.7	1.9	0.8	0.9	1.9	2.6	2.3	1.8	0.3
LnGrp Delay(d),s/veh	13.1	19.1	16.1	12.1	13.8	13.0	27.5	19.3	21.3	24.6	15.8	14.5
LnGrp LOS	B	B	B	B	B	B	C	B	C	C	B	B
Approach Vol, veh/h		447			418			390			334	
Approach Delay, s/veh		17.9			12.9			21.4			19.8	
Approach LOS		B			B			C			B	

Timer	1	2	3	4	5	6	7	8
Assigned Phs	1	2	3	4	5	6	7	8
Phs Duration (G+Y+Rc), s	11.0	14.1	10.2	17.1	7.3	17.9	6.7	20.6
Change Period (Y+Rc), s	5.0	5.0	5.0	5.0	5.0	5.0	5.0	5.0
Max Green Setting (Gmax), s	16.0	17.0	10.0	27.0	6.0	27.0	4.0	33.0
Max Q Clear Time (g_c+I1), s	6.3	7.6	5.4	9.6	3.6	5.4	2.8	5.7
Green Ext Time (p_c), s	0.3	1.5	0.2	2.5	0.0	2.1	0.0	2.8

Intersection Summary	
HCM 2010 Ctrl Delay	17.8
HCM 2010 LOS	B

Phase Number	1	2	3	4	5	6	7	8
Movement	SBL	NBT	WBL	EBTL	NBL	SBT	EBL	WBTL
Lead/Lag	Lead	Lag	Lead	Lag	Lead	Lag	Lead	Lag
Lead-Lag Optimize	Yes	Yes	Yes	Yes	Yes	Yes	Yes	Yes
Recall Mode	None	Min	None	None	None	Min	None	None
Maximum Split (s)	21	22	15	32	11	32	9	38
Maximum Split (%)	23.3%	24.4%	16.7%	35.6%	12.2%	35.6%	10.0%	42.2%
Minimum Split (s)	9	15	9	15	9	15	9	15
Yellow Time (s)	3.5	3.5	3.5	3.5	3.5	3.5	3.5	3.5
All-Red Time (s)	1.5	1.5	1.5	1.5	1.5	1.5	1.5	1.5
Minimum Initial (s)	4	4	4	4	4	4	4	4
Vehicle Extension (s)	3	3	3	3	3	3	3	3
Minimum Gap (s)	3	3	3	3	3	3	3	3
Time Before Reduce (s)	0	0	0	0	0	0	0	0
Time To Reduce (s)	0	0	0	0	0	0	0	0
Walk Time (s)		1		1		1		1
Flash Dont Walk (s)		1		1		1		1
Dual Entry	No	Yes	No	Yes	No	Yes	No	Yes
Inhibit Max	Yes	Yes	Yes	Yes	Yes	Yes	Yes	Yes
Start Time (s)	0	21	43	58	0	11	43	52
End Time (s)	21	43	58	0	11	43	52	0
Yield/Force Off (s)	16	38	53	85	6	38	47	85
Yield/Force Off 170(s)	16	38	53	84	6	38	47	84
Local Start Time (s)	69	0	22	37	69	80	22	31
Local Yield (s)	85	17	32	64	75	17	26	64
Local Yield 170(s)	85	17	32	63	75	17	26	63

Intersection Summary	
Cycle Length	90
Control Type	Actuated-Uncoordinated
Natural Cycle	55

Splits and Phases: 1: Rt. 10 Bypass & Main St

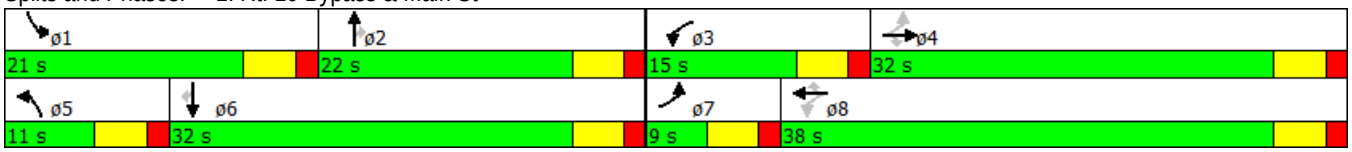

Intersection	
Int Delay, s/veh	3.4

Movement	EBL	EBR	NBL	NBT	SBT	SBR
Vol, veh/h	0	107	87	154	156	1
Conflicting Peds, #/hr	0	0	0	0	0	0
Sign Control	Stop	Stop	Free	Free	Free	Free
RT Channelized	-	None	-	None	-	None
Storage Length	0	-	0	-	-	-
Veh in Median Storage, #	0	-	-	0	0	-
Grade, %	0	-	-	0	0	-
Peak Hour Factor	92	92	92	92	92	92
Heavy Vehicles, %	2	2	2	2	2	2
Mvmt Flow	0	116	95	167	170	1

Major/Minor	Minor2		Major1		Major2	
Conflicting Flow All	527	170	171	0	-	0
Stage 1	170	-	-	-	-	-
Stage 2	357	-	-	-	-	-
Critical Hdwy	6.42	6.22	4.12	-	-	-
Critical Hdwy Stg 1	5.42	-	-	-	-	-
Critical Hdwy Stg 2	5.42	-	-	-	-	-
Follow-up Hdwy	3.518	3.318	2.218	-	-	-
Pot Cap-1 Maneuver	512	874	1406	-	-	-
Stage 1	860	-	-	-	-	-
Stage 2	708	-	-	-	-	-
Platoon blocked, %				-	-	-
Mov Cap-1 Maneuver	477	874	1406	-	-	-
Mov Cap-2 Maneuver	477	-	-	-	-	-
Stage 1	860	-	-	-	-	-
Stage 2	660	-	-	-	-	-

Approach	EB	NB	SB
HCM Control Delay, s	9.8	2.8	0
HCM LOS	A		

Minor Lane/Major Mvmt	NBL	NBT	EBLn1	SBT	SBR
Capacity (veh/h)	1406	-	874	-	-
HCM Lane V/C Ratio	0.067	-	0.133	-	-
HCM Control Delay (s)	7.7	-	9.8	-	-
HCM Lane LOS	A	-	A	-	-
HCM 95th %tile Q(veh)	0.2	-	0.5	-	-

Intersection	
Int Delay, s/veh	2.3

Movement	EBL	EBT	EBR	WBL	WBT	WBR	NBL	NBT	NBR	SBL	SBT	SBR
Vol, veh/h	18	0	46	14	0	19	14	204	6	14	243	6
Conflicting Peds, #/hr	0	0	0	0	0	0	0	0	0	0	0	0
Sign Control	Stop	Stop	Stop	Stop	Stop	Stop	Free	Free	Free	Free	Free	Free
RT Channelized	-	-	None	-	-	None	-	-	None	-	-	None
Storage Length	-	-	-	-	-	-	0	-	-	0	-	-
Veh in Median Storage, #	-	0	-	-	0	-	-	0	-	-	0	-
Grade, %	-	0	-	-	0	-	-	0	-	-	0	-
Peak Hour Factor	92	92	92	92	92	92	92	92	92	92	92	92
Heavy Vehicles, %	2	2	2	2	2	2	2	2	2	2	2	2
Mvmt Flow	20	0	50	15	0	21	15	222	7	15	264	7

Major/Minor	Minor2			Minor1			Major1			Major2		
Conflicting Flow All	564	557	267	578	556	225	271	0	0	228	0	0
Stage 1	298	298	-	255	255	-	-	-	-	-	-	-
Stage 2	266	259	-	323	301	-	-	-	-	-	-	-
Critical Hdwy	7.12	6.52	6.22	7.12	6.52	6.22	4.12	-	-	4.12	-	-
Critical Hdwy Stg 1	6.12	5.52	-	6.12	5.52	-	-	-	-	-	-	-
Critical Hdwy Stg 2	6.12	5.52	-	6.12	5.52	-	-	-	-	-	-	-
Follow-up Hdwy	3.518	4.018	3.318	3.518	4.018	3.318	2.218	-	-	2.218	-	-
Pot Cap-1 Maneuver	436	439	772	427	439	814	1292	-	-	1340	-	-
Stage 1	711	667	-	749	696	-	-	-	-	-	-	-
Stage 2	739	694	-	689	665	-	-	-	-	-	-	-
Platoon blocked, %								-	-		-	-
Mov Cap-1 Maneuver	418	429	772	392	429	814	1292	-	-	1340	-	-
Mov Cap-2 Maneuver	418	429	-	392	429	-	-	-	-	-	-	-
Stage 1	703	660	-	740	688	-	-	-	-	-	-	-
Stage 2	712	686	-	637	658	-	-	-	-	-	-	-

Approach	EB	WB	NB	SB
HCM Control Delay, s	11.5	11.9	0.5	0.4
HCM LOS	B	B		

Minor Lane/Major Mvmt	NBL	NBT	NBR	EBLn1	WBLn1	SBL	SBT	SBR
Capacity (veh/h)	1292	-	-	623	559	1340	-	-
HCM Lane V/C Ratio	0.012	-	-	0.112	0.064	0.011	-	-
HCM Control Delay (s)	7.8	-	-	11.5	11.9	7.7	-	-
HCM Lane LOS	A	-	-	B	B	A	-	-
HCM 95th %tile Q(veh)	0	-	-	0.4	0.2	0	-	-

Intersection	
Int Delay, s/veh	1.5

Movement	EBL	EBT	EBR	WBL	WBT	WBR	NBL	NBT	NBR	SBL	SBT	SBR
Vol, veh/h	1	48	6	2	141	4	13	0	5	14	0	2
Conflicting Peds, #/hr	0	0	0	0	0	0	0	0	0	0	0	0
Sign Control	Free	Free	Free	Free	Free	Free	Stop	Stop	Stop	Stop	Stop	Stop
RT Channelized	-	-	None	-	-	None	-	-	None	-	-	None
Storage Length	-	-	-	-	-	-	-	-	-	-	-	-
Veh in Median Storage, #	-	0	-	-	0	-	-	0	-	-	0	-
Grade, %	-	0	-	-	0	-	-	0	-	-	0	-
Peak Hour Factor	92	92	92	92	92	92	92	92	92	92	92	92
Heavy Vehicles, %	2	2	2	2	2	2	2	2	2	2	2	2
Mvmt Flow	1	52	7	2	153	4	14	0	5	15	0	2

Major/Minor	Major1			Major2			Minor1			Minor2		
Conflicting Flow All	158	0	0	59	0	0	219	220	55	220	221	155
Stage 1	-	-	-	-	-	-	58	58	-	160	160	-
Stage 2	-	-	-	-	-	-	161	162	-	60	61	-
Critical Hdwy	4.12	-	-	4.12	-	-	7.12	6.52	6.22	7.12	6.52	6.22
Critical Hdwy Stg 1	-	-	-	-	-	-	6.12	5.52	-	6.12	5.52	-
Critical Hdwy Stg 2	-	-	-	-	-	-	6.12	5.52	-	6.12	5.52	-
Follow-up Hdwy	2.218	-	-	2.218	-	-	3.518	4.018	3.318	3.518	4.018	3.318
Pot Cap-1 Maneuver	1422	-	-	1545	-	-	737	678	1012	736	678	891
Stage 1	-	-	-	-	-	-	954	847	-	842	766	-
Stage 2	-	-	-	-	-	-	841	764	-	951	844	-
Platoon blocked, %		-	-		-	-						
Mov Cap-1 Maneuver	1422	-	-	1545	-	-	734	677	1012	731	677	891
Mov Cap-2 Maneuver	-	-	-	-	-	-	734	677	-	731	677	-
Stage 1	-	-	-	-	-	-	953	846	-	841	765	-
Stage 2	-	-	-	-	-	-	838	763	-	945	843	-

Approach	EB	WB	NB	SB
HCM Control Delay, s	0.1	0.1	9.6	9.9
HCM LOS			A	A

Minor Lane/Major Mvmt	NBLn1	EBL	EBT	EBR	WBL	WBT	WBR	SBLn1
Capacity (veh/h)	795	1422	-	-	1545	-	-	748
HCM Lane V/C Ratio	0.025	0.001	-	-	0.001	-	-	0.023
HCM Control Delay (s)	9.6	7.5	0	-	7.3	0	-	9.9
HCM Lane LOS	A	A	A	-	A	A	-	A
HCM 95th %tile Q(veh)	0.1	0	-	-	0	-	-	0.1

HCM 2010 Signalized Intersection Summary
1: Rt. 10 Bypass & Main St

2/24/2015

Movement	EBL	EBT	EBR	WBL	WBT	WBR	NBL	NBT	NBR	SBL	SBT	SBR
Lane Configurations												
Volume (veh/h)	54	326	82	313	247	130	93	234	314	161	240	24
Number	7	4	14	3	8	18	5	2	12	1	6	16
Initial Q (Qb), veh	0	0	0	0	0	0	0	0	0	0	0	0
Ped-Bike Adj(A_pbT)	1.00		1.00	1.00		1.00	1.00		1.00	1.00		1.00
Parking Bus, Adj	1.00	1.00	1.00	1.00	1.00	1.00	1.00	1.00	1.00	1.00	1.00	1.00
Adj Sat Flow, veh/h/ln	1863	1863	1863	1863	1863	1863	1863	1863	1863	1863	1863	1863
Adj Flow Rate, veh/h	59	354	89	340	268	141	101	254	341	175	261	26
Adj No. of Lanes	1	1	1	1	1	1	1	1	1	1	1	1
Peak Hour Factor	0.92	0.92	0.92	0.92	0.92	0.92	0.92	0.92	0.92	0.92	0.92	0.92
Percent Heavy Veh, %	2	2	2	2	2	2	2	2	2	2	2	2
Cap, veh/h	407	445	378	449	673	572	150	486	414	233	573	487
Arrive On Green	0.05	0.24	0.24	0.17	0.36	0.36	0.08	0.26	0.26	0.13	0.31	0.31
Sat Flow, veh/h	1774	1863	1583	1774	1863	1583	1774	1863	1583	1774	1863	1583
Grp Volume(v), veh/h	59	354	89	340	268	141	101	254	341	175	261	26
Grp Sat Flow(s),veh/h/ln	1774	1863	1583	1774	1863	1583	1774	1863	1583	1774	1863	1583
Q Serve(g_s), s	2.0	14.5	3.7	10.9	8.7	5.1	4.5	9.5	16.4	7.7	9.1	0.9
Cycle Q Clear(g_c), s	2.0	14.5	3.7	10.9	8.7	5.1	4.5	9.5	16.4	7.7	9.1	0.9
Prop In Lane	1.00		1.00	1.00		1.00	1.00		1.00	1.00		1.00
Lane Grp Cap(c), veh/h	407	445	378	449	673	572	150	486	414	233	573	487
V/C Ratio(X)	0.14	0.80	0.24	0.76	0.40	0.25	0.67	0.52	0.82	0.75	0.46	0.05
Avail Cap(c_a), veh/h	431	529	449	452	735	625	219	552	469	285	620	527
HCM Platoon Ratio	1.00	1.00	1.00	1.00	1.00	1.00	1.00	1.00	1.00	1.00	1.00	1.00
Upstream Filter(I)	1.00	1.00	1.00	1.00	1.00	1.00	1.00	1.00	1.00	1.00	1.00	1.00
Uniform Delay (d), s/veh	21.3	29.0	24.9	18.4	19.3	18.1	36.0	25.6	28.2	33.9	22.6	19.7
Incr Delay (d2), s/veh	0.2	7.1	0.3	7.1	0.4	0.2	5.1	0.9	10.4	8.6	0.6	0.0
Initial Q Delay(d3),s/veh	0.0	0.0	0.0	0.0	0.0	0.0	0.0	0.0	0.0	0.0	0.0	0.0
%ile BackOfQ(50%),veh/ln	1.0	8.2	1.6	6.1	4.5	2.2	2.4	5.0	8.4	4.3	4.8	0.4
LnGrp Delay(d),s/veh	21.4	36.0	25.2	25.6	19.7	18.4	41.1	26.5	38.6	42.5	23.1	19.8
LnGrp LOS	C	D	C	C	B	B	D	C	D	D	C	B
Approach Vol, veh/h		502			749			696			462	
Approach Delay, s/veh		32.4			22.1			34.5			30.3	
Approach LOS		C			C			C			C	

Timer	1	2	3	4	5	6	7	8
Assigned Phs	1	2	3	4	5	6	7	8
Phs Duration (G+Y+Rc), s	14.6	25.2	17.9	23.4	10.9	28.9	7.9	33.3
Change Period (Y+Rc), s	5.0	5.0	5.0	5.0	5.0	5.0	5.0	5.0
Max Green Setting (Gmax), s	12.0	23.0	13.0	22.0	9.0	26.0	4.0	31.0
Max Q Clear Time (g_c+I1), s	9.7	18.4	12.9	16.5	6.5	11.1	4.0	10.7
Green Ext Time (p_c), s	0.1	1.7	0.0	1.9	0.1	3.5	0.0	3.6

Intersection Summary	
HCM 2010 Ctrl Delay	29.4
HCM 2010 LOS	C

Phase Number	1	2	3	4	5	6	7	8
Movement	SBL	NBT	WBL	EBTL	NBL	SBT	EBL	WBTL
Lead/Lag	Lead	Lag	Lead	Lag	Lead	Lag	Lead	Lag
Lead-Lag Optimize	Yes	Yes	Yes	Yes	Yes	Yes	Yes	Yes
Recall Mode	None	Min	None	None	None	Min	None	None
Maximum Split (s)	17	28	18	27	14	31	9	36
Maximum Split (%)	18.9%	31.1%	20.0%	30.0%	15.6%	34.4%	10.0%	40.0%
Minimum Split (s)	9	15	9	15	9	15	9	15
Yellow Time (s)	3.5	3.5	3.5	3.5	3.5	3.5	3.5	3.5
All-Red Time (s)	1.5	1.5	1.5	1.5	1.5	1.5	1.5	1.5
Minimum Initial (s)	4	4	4	4	4	4	4	4
Vehicle Extension (s)	3	3	3	3	3	3	3	3
Minimum Gap (s)	3	3	3	3	3	3	3	3
Time Before Reduce (s)	0	0	0	0	0	0	0	0
Time To Reduce (s)	0	0	0	0	0	0	0	0
Walk Time (s)		1		1		1		1
Flash Dont Walk (s)		1		1		1		1
Dual Entry	No	Yes	No	Yes	No	Yes	No	Yes
Inhibit Max	Yes	Yes	Yes	Yes	Yes	Yes	Yes	Yes
Start Time (s)	0	17	45	63	0	14	45	54
End Time (s)	17	45	63	0	14	45	54	0
Yield/Force Off (s)	12	40	58	85	9	40	49	85
Yield/Force Off 170(s)	12	40	58	84	9	40	49	84
Local Start Time (s)	73	0	28	46	73	87	28	37
Local Yield (s)	85	23	41	68	82	23	32	68
Local Yield 170(s)	85	23	41	67	82	23	32	67

Intersection Summary	
Cycle Length	90
Control Type	Actuated-Uncoordinated
Natural Cycle	60

Splits and Phases: 1: Rt. 10 Bypass & Main St

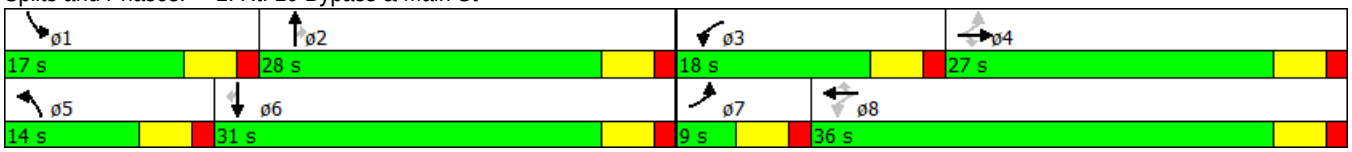

Intersection	
Int Delay, s/veh	3.8

Movement	EBL	EBR	NBL	NBT	SBT	SBR
Vol, veh/h	17	145	129	253	285	10
Conflicting Peds, #/hr	0	0	0	0	0	0
Sign Control	Stop	Stop	Free	Free	Free	Free
RT Channelized	-	None	-	None	-	None
Storage Length	0	-	0	-	-	-
Veh in Median Storage, #	0	-	-	0	0	-
Grade, %	0	-	-	0	0	-
Peak Hour Factor	92	92	92	92	92	92
Heavy Vehicles, %	2	2	2	2	2	2
Mvmt Flow	18	158	140	275	310	11

Major/Minor	Minor2		Major1		Major2	
Conflicting Flow All	870	315	321	0	-	0
Stage 1	315	-	-	-	-	-
Stage 2	555	-	-	-	-	-
Critical Hdwy	6.42	6.22	4.12	-	-	-
Critical Hdwy Stg 1	5.42	-	-	-	-	-
Critical Hdwy Stg 2	5.42	-	-	-	-	-
Follow-up Hdwy	3.518	3.318	2.218	-	-	-
Pot Cap-1 Maneuver	322	725	1239	-	-	-
Stage 1	740	-	-	-	-	-
Stage 2	575	-	-	-	-	-
Platoon blocked, %				-	-	-
Mov Cap-1 Maneuver	286	725	1239	-	-	-
Mov Cap-2 Maneuver	286	-	-	-	-	-
Stage 1	740	-	-	-	-	-
Stage 2	510	-	-	-	-	-

Approach	EB	NB	SB
HCM Control Delay, s	13	2.8	0
HCM LOS	B		

Minor Lane/Major Mvmt	NBL	NBT	EBLn1	SBT	SBR
Capacity (veh/h)	1239	-	624	-	-
HCM Lane V/C Ratio	0.113	-	0.282	-	-
HCM Control Delay (s)	8.3	-	13	-	-
HCM Lane LOS	A	-	B	-	-
HCM 95th %tile Q(veh)	0.4	-	1.2	-	-

Intersection	
Int Delay, s/veh	1.9

Movement	EBL	EBT	EBR	WBL	WBT	WBR	NBL	NBT	NBR	SBL	SBT	SBR
Vol, veh/h	12	0	31	11	0	19	48	351	17	23	387	20
Conflicting Peds, #/hr	0	0	0	0	0	0	0	0	0	0	0	0
Sign Control	Stop	Stop	Stop	Stop	Stop	Stop	Free	Free	Free	Free	Free	Free
RT Channelized	-	-	None	-	-	None	-	-	None	-	-	None
Storage Length	-	-	-	-	-	-	0	-	-	0	-	-
Veh in Median Storage, #	-	0	-	-	0	-	-	0	-	-	0	-
Grade, %	-	0	-	-	0	-	-	0	-	-	0	-
Peak Hour Factor	92	92	92	92	92	92	92	92	92	92	92	92
Heavy Vehicles, %	2	2	2	2	2	2	2	2	2	2	2	2
Mvmt Flow	13	0	34	12	0	21	52	382	18	25	421	22

Major/Minor	Minor2			Minor1			Major1			Major2		
Conflicting Flow All	987	986	432	993	987	391	442	0	0	400	0	0
Stage 1	482	482	-	495	495	-	-	-	-	-	-	-
Stage 2	505	504	-	498	492	-	-	-	-	-	-	-
Critical Hdwy	7.12	6.52	6.22	7.12	6.52	6.22	4.12	-	-	4.12	-	-
Critical Hdwy Stg 1	6.12	5.52	-	6.12	5.52	-	-	-	-	-	-	-
Critical Hdwy Stg 2	6.12	5.52	-	6.12	5.52	-	-	-	-	-	-	-
Follow-up Hdwy	3.518	4.018	3.318	3.518	4.018	3.318	2.218	-	-	2.218	-	-
Pot Cap-1 Maneuver	226	248	624	224	247	658	1118	-	-	1159	-	-
Stage 1	565	553	-	556	546	-	-	-	-	-	-	-
Stage 2	549	541	-	554	548	-	-	-	-	-	-	-
Platoon blocked, %								-	-		-	-
Mov Cap-1 Maneuver	208	231	624	201	230	658	1118	-	-	1159	-	-
Mov Cap-2 Maneuver	208	231	-	201	230	-	-	-	-	-	-	-
Stage 1	539	541	-	530	521	-	-	-	-	-	-	-
Stage 2	507	516	-	513	536	-	-	-	-	-	-	-

Approach	EB	WB	NB	SB
HCM Control Delay, s	15.2	16	1	0.4
HCM LOS	C	C		

Minor Lane/Major Mvmt	NBL	NBT	NBR	EBLn1	WBLn1	SBL	SBT	SBR
Capacity (veh/h)	1118	-	-	400	359	1159	-	-
HCM Lane V/C Ratio	0.047	-	-	0.117	0.091	0.022	-	-
HCM Control Delay (s)	8.4	-	-	15.2	16	8.2	-	-
HCM Lane LOS	A	-	-	C	C	A	-	-
HCM 95th %tile Q(veh)	0.1	-	-	0.4	0.3	0.1	-	-

Intersection	
Int Delay, s/veh	0.7

Movement	EBL	EBT	EBR	WBL	WBT	WBR	NBL	NBT	NBR	SBL	SBT	SBR
Vol, veh/h	3	229	19	6	101	10	9	0	3	6	0	1
Conflicting Peds, #/hr	0	0	0	0	0	0	0	0	0	0	0	0
Sign Control	Free	Free	Free	Free	Free	Free	Stop	Stop	Stop	Stop	Stop	Stop
RT Channelized	-	-	None	-	-	None	-	-	None	-	-	None
Storage Length	-	-	-	-	-	-	-	-	-	-	-	-
Veh in Median Storage, #	-	0	-	-	0	-	-	0	-	-	0	-
Grade, %	-	0	-	-	0	-	-	0	-	-	0	-
Peak Hour Factor	92	92	92	92	92	92	92	92	92	92	92	92
Heavy Vehicles, %	2	2	2	2	2	2	2	2	2	2	2	2
Mvmt Flow	3	249	21	7	110	11	10	0	3	7	0	1

Major/Minor	Major1			Major2			Minor1			Minor2		
Conflicting Flow All	121	0	0	270	0	0	395	400	259	395	404	115
Stage 1	-	-	-	-	-	-	266	266	-	128	128	-
Stage 2	-	-	-	-	-	-	129	134	-	267	276	-
Critical Hdwy	4.12	-	-	4.12	-	-	7.12	6.52	6.22	7.12	6.52	6.22
Critical Hdwy Stg 1	-	-	-	-	-	-	6.12	5.52	-	6.12	5.52	-
Critical Hdwy Stg 2	-	-	-	-	-	-	6.12	5.52	-	6.12	5.52	-
Follow-up Hdwy	2.218	-	-	2.218	-	-	3.518	4.018	3.318	3.518	4.018	3.318
Pot Cap-1 Maneuver	1467	-	-	1293	-	-	565	538	780	565	536	937
Stage 1	-	-	-	-	-	-	739	689	-	876	790	-
Stage 2	-	-	-	-	-	-	875	785	-	738	682	-
Platoon blocked, %		-	-		-	-						
Mov Cap-1 Maneuver	1467	-	-	1293	-	-	561	534	780	559	532	937
Mov Cap-2 Maneuver	-	-	-	-	-	-	561	534	-	559	532	-
Stage 1	-	-	-	-	-	-	738	688	-	874	785	-
Stage 2	-	-	-	-	-	-	869	780	-	733	681	-

Approach	EB	WB	NB	SB
HCM Control Delay, s	0.1	0.4	11.1	11.2
HCM LOS			B	B

Minor Lane/Major Mvmt	NBLn1	EBL	EBT	EBR	WBL	WBT	WBR	SBLn1
Capacity (veh/h)	603	1467	-	-	1293	-	-	593
HCM Lane V/C Ratio	0.022	0.002	-	-	0.005	-	-	0.013
HCM Control Delay (s)	11.1	7.5	0	-	7.8	0	-	11.2
HCM Lane LOS	B	A	A	-	A	A	-	B
HCM 95th %tile Q(veh)	0.1	0	-	-	0	-	-	0