GENERAL NOTES

A. EXISTING COMM OUTLETS MOUNTED AT +54" AFF HAVE A 1" CONDUIT ROUTED OVERHEAD TO TELECOM BACKBOARD. EXISTING COMM OUTLETS MOUNTED AT +18" AFF HAVE A 1" CONDUIT ROUTED UNDERGROUND TO TELECOM BACKBOARD.

KEYNOTES

APPLIES TO DRAWINGS An.1 - An.nn
REPRESENTED BY n

1. RUN TWO COMPARTMENT SURFACE RACEWAY DOWN CORNER AND OVER TO DATA OUTLET AT +18" AFF. OWNER SHALL PROVIDE DATA CABLE, JACKS, AND COVERPLATE.

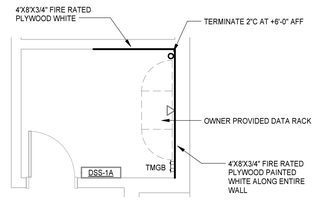

1 / E2.3 E2.3 **ENLARGED FLOOR PLAN - COMMUNICATIONS - IT/DATA 105**
1/4" = 1'-0"

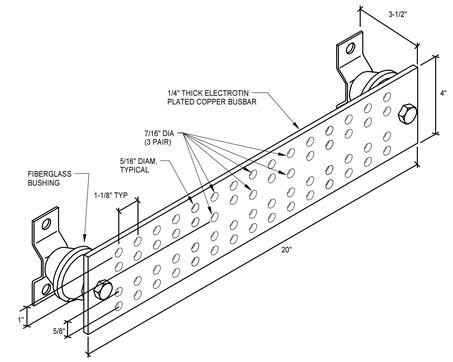

TELECOMMUNICATIONS MAIN GROUNDING BUSBAR (TMGB) DETAIL
NO SCALE

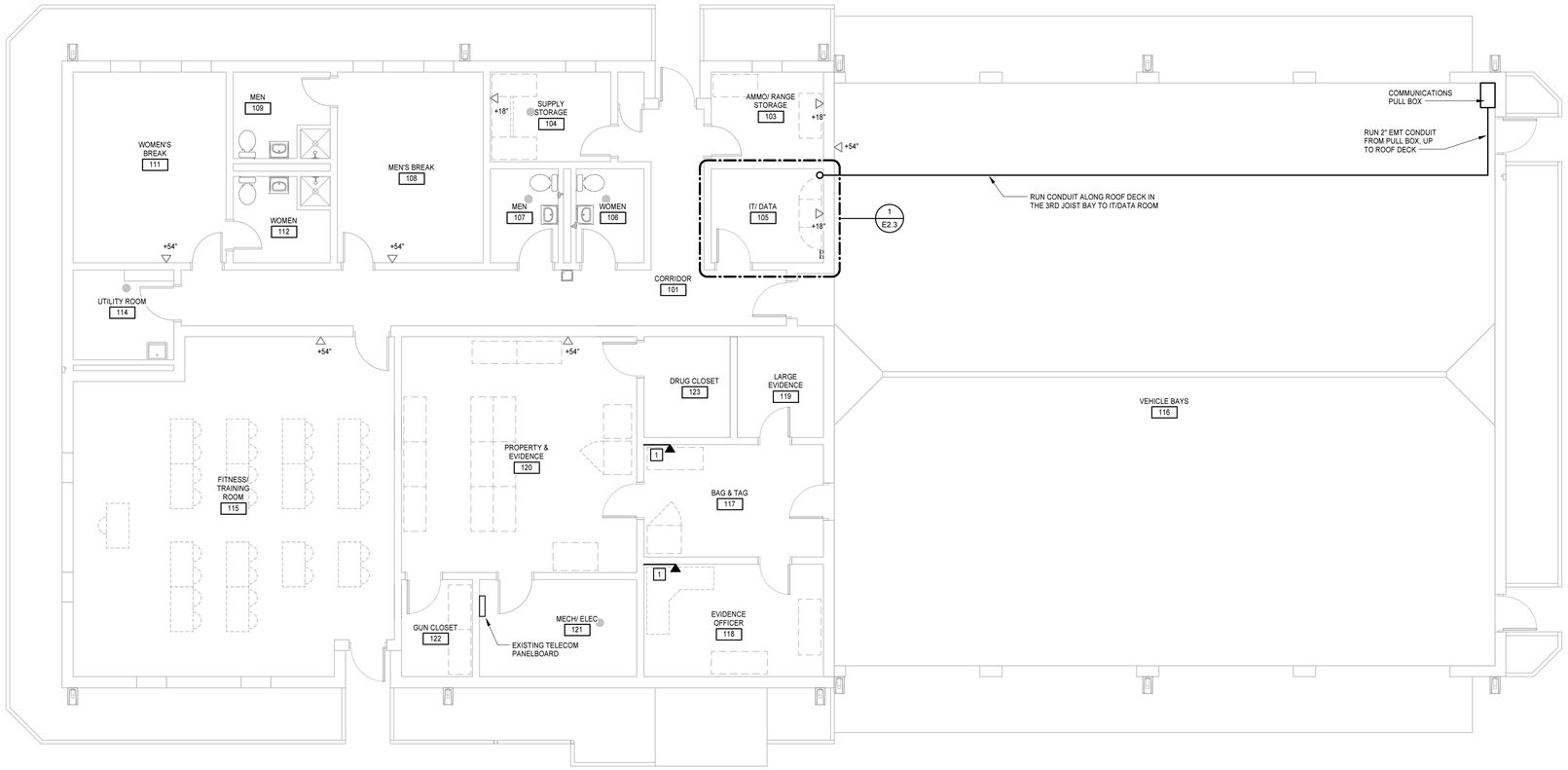

N **FLOOR PLAN - COMMUNICATIONS**
3/16" = 1'-0"

MOSELEYARCHITECTS
3200 NORFOLK STREET, RICHMOND, VA 23230
PHONE (804) 794-7355 FAX (804) 355-5690
MOSELEYARCHITECTS.COM

COMMONWEALTH OF VIRGINIA
HAROLD A. LANNA
Lic. No. 13231
10-15-2015
PROFESSIONAL ENGINEER

EVIDENCE STORAGE BUILDING

SMITHFIELD, VIRGINIA

PROJECT NO: 550322	DATE: OCTOBER 15, 2015
REVISIONS	
DATE	DESCRIPTION

FLOOR PLAN - COMMUNICATIONS

E2.3

10/19/2015 10:58:19 AM