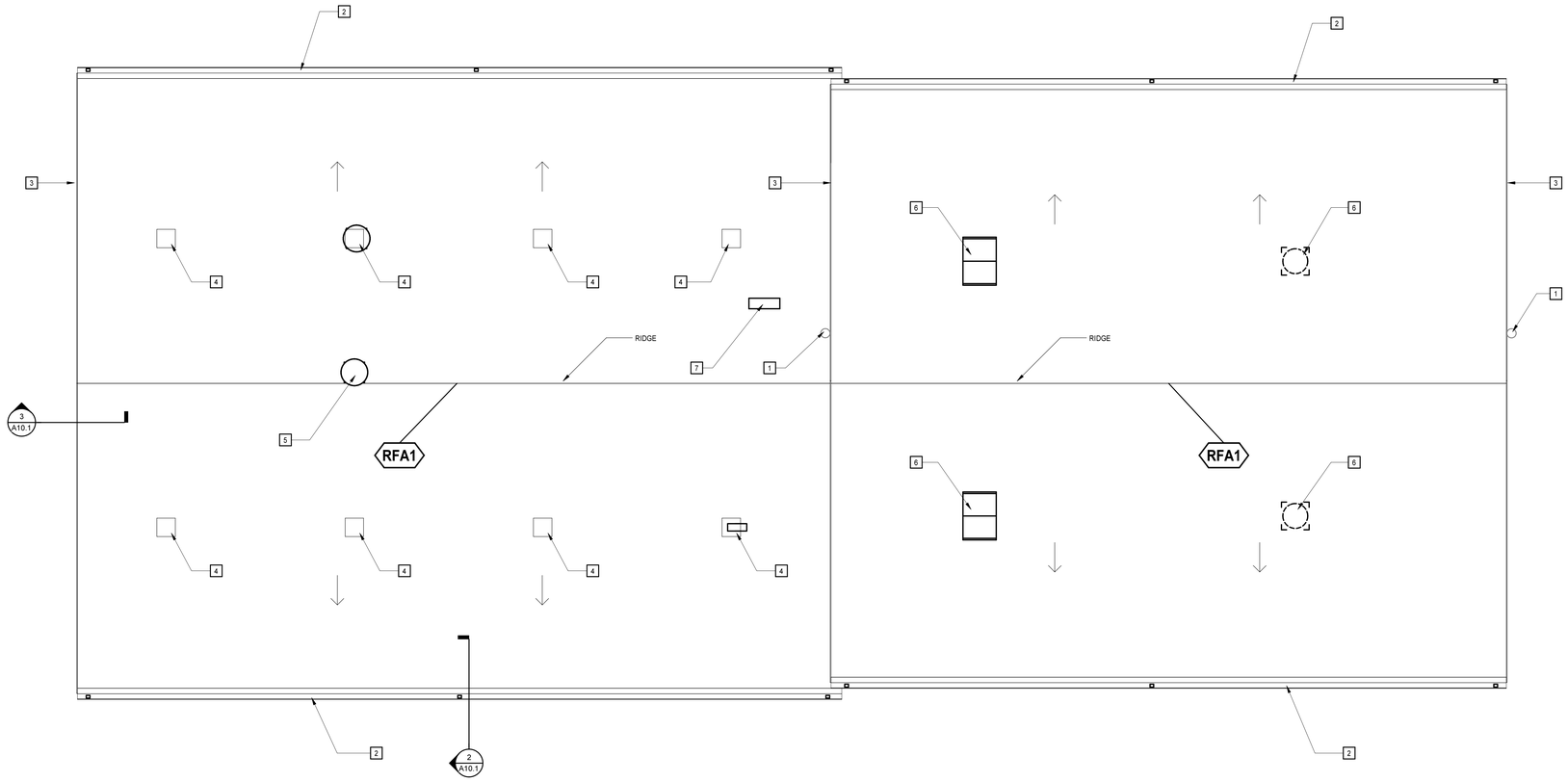

ROOF PLAN

3/16" = 1'-0"

ROOF PLAN LEGEND

APPLIES TO DRAWING A10.1
REFER TO M & E DRAWINGS FOR ROOF SYMBOLS NOT INDICATED BELOW

DS	GUTTER AND DOWNSPOUT (RECTANGULAR SHOWN, MAY BE ROUND IF SPECIFIED)
	WALKWAY PATH
	INDICATES DOWN DIRECTION OF ROOF ASSEMBLY SLOPE

ROOF PLAN GENERAL NOTES

A. ALL EXIST ROOFING, INSULATION, FLASHINGS, DRAINS, GUTTERS AND DOWNSPOUTS SHALL BE DEMOLISHED. EXISTING METAL DECKING SHALL REMAIN.

B. ROOF PLAN DOES NOT INDICATE ALL EQUIPMENT AND PENETRATIONS. REFER TO OTHER DISCIPLINE'S DRAWINGS FOR QUANTITIES AND LOCATIONS OF ROOFTOP EQUIPMENT AND ASSOCIATED PENETRATIONS.

C. COORDINATE LOCATION AND SIZE OF ROOF OPENINGS AND ASSOCIATED PENETRATIONS WITH STRUCTURE.

D. ROOF DETAILS MAY NOT ENTIRELY REPRESENT ACTUAL CONSTRUCTION CONDITIONS. ACTUAL DETAIL ASSEMBLIES SHALL BE APPROVED BY ROOFING MANUFACTURER.

E. ROOF PLAN DOES NOT INDICATE ALL ROOFING DETAILS (INCLUDING BUT NOT LIMITED TO ROOF DRAINS; VTR. CURBS; EXPANSION JOINTS; ROOF HATCHES). PROVIDE MFR'S DETAILS AS REQUIRED TO SUIT SPECIFIC APPLICATION AND SPECIFICATIONS.

F. PROVIDE CRICKETS AT DRAINS, WALLS, CURBS, MECHANICAL EQUIPMENT, AND OTHER OBSTRUCTIONS SUCH THAT 1/4" PER FOOT MINIMUM POSITIVE DRAINAGE SLOPE IS MAINTAINED AT ALL SUCH AREAS.

G. PROVIDE DOUBLE-LAYER OF MEMBRANE ROOFING MATERIAL UNDER SPLASH BLOCKS.

H. CENTER ALL PENETRATIONS BETWEEN RIBS OF METAL ROOFING. PIPING, DUCTWORK AND CURBS SHALL BE OFFSET AS REQUIRED TO ACHIEVE PENETRATIONS CENTERED BETWEEN RIBS.

ROOF PLAN KEYNOTES

APPLIES TO DRAWING A10.1
REPRESENTED BY n

1. GAS FLUE SHALL REMAIN
2. 6" X 6" PREFINISHED MTL GUTTER, WITH GUTTER STRAPS
3. PREFINISHED MTL FASCIA PANEL @ RAKE
4. WHERE GRAVITY VENTILATORS HAVE BEEN REMOVED, REFER TO "EXISTING ROOF CURB CAP DETAIL" ON DWG M5.1
5. EX GRAVITY VENT SHALL REMAIN
6. GRAVITY VENT - REFER TO DWG M1-1
7. CONDENSING UNIT - REFER TO DWG M1-1

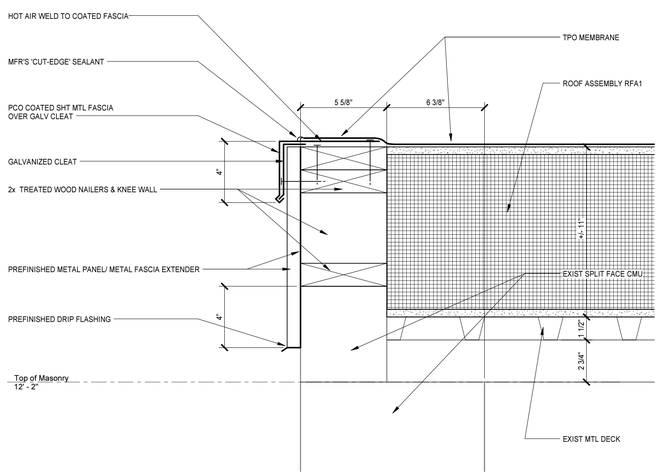

3 RAKE DETAIL

A10.1 A10.1 3" = 1'-0"

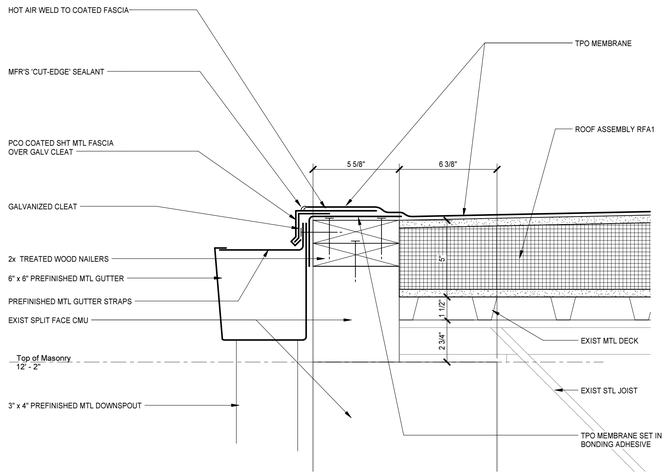

2 GUTTER DETAIL

TYP A10.1 3" = 1'-0"

ROOF ASSEMBLIES

APPLIES TO DRAWING A10.1
REPRESENTED BY ⟨RFA#⟩

MARK	REMARKS	INFORMATION
RFA1		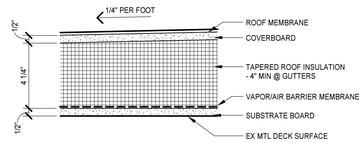

MOSELEYARCHITECTS
3200 NORFOLK STREET, RICHMOND, VA 23230
PHONE (804) 794-7555 FAX (804) 355-5690
MOSELEYARCHITECTS.COM

COMMONWEALTH OF VIRGINIA
J. BELLETTI
Lic. No. 009147
10/15/2015
ARCHITECT

EVIDENCE STORAGE BUILDING

SMITHFIELD, VIRGINIA

PROJECT NO: 550322	DATE: OCTOBER 15, 2015
REVISIONS	
DATE	DESCRIPTION

ROOF PLAN

A10.1

10/16/2015 1:20:57 PM